PeakTech®

Prüf- und Messtechnik

Spitzentechnologie, die überzeugt

PeakTech® 4095

PeakTech® 4096

Operation manual

Graphical Bench-Type Multimeter

Table of Contents

1.Safety Information *1*

Safety Terms and Symbols **1**

General Safety Requirements **2**

Measurement Limits **3**

Main Input Terminals (HI Input and LO Input) Measurement Limits 3

Current Input Terminal (I) Measurement Limits 4

Sense Terminals (HI Sense and LO Sense) Measurement Limits 4

Measurement Category **4**

2.Quick Start *6*

General Inspection **6**

Dimensions **7**

Foot Stool Adjustment **7**

Front Panel Overview **8**

Rear Panel Overview **11**

User Interface **12**

AC Power Input Setting **13**

Power On **14**

Measurement Connections **14**

3.Functions and Operations *17*

To Set The Range **17**

Measurement Speed and Resolution **19**

Basic Measurement Functions **20**

Measuring DC Voltage 20

Measuring AC Voltage 21

Measuring DC Current 23

Measuring AC Current 24
Measuring Resistance 25
Continuity Test 28
Diode Test 29
Measuring Capacitance 30
Measuring Frequency and Period 31
Measuring Temperature 33
Dual Display 35
Triggering 37
Auto Trigger 37
Single Trigger 37
External Trigger 38
Math 39
Statistics 39
Limits 39
dB/dBm 40
Relative Value 41
Display 42
Number 42
Bar Meter 42
Trend Chart 43
Histogram 44
Data Record Function 46
Manual Record 46
Auto Record 47
Port Configuration 49
Serial 49
Trigger 49

Output 49

Net Type 49

LAN 50

Utility Menu 50

Language 50

Backlight 50

Clock 50

SCPI 50

Default 50

System Info 54

Update firmware 54

LCD Test 55

Key Test 55

4.Measurement Tutorial 57

Loading Errors (DC Voltage) 57

True RMS AC Measurements 58

Loading Errors (AC Voltage) 60

5.Troubleshooting 61

6.Technical Specifications 62

7.Appendix 67

Appendix A: Enclosure 67

Appendix B: General Care and Cleaning 67

Appendix C: Line Fuse Replacement 68

1. Safety Information

Safety Terms and Symbols

Safety Terms

Terms in this Manual. The following terms may appear in this manual:

Warning: Warning indicates the conditions or practices that could result in injury or loss of life.

Caution: Caution indicates the conditions or practices that could result in damage to this product or other property.

Terms on the Product. The following terms may appear on this product:
Danger: It indicates an injury or hazard may immediately happen.
Warning: It indicates an injury or hazard may be accessible potentially.
Caution: It indicates a potential damage to the instrument or other property might occur.

Safety Symbols

Symbols on the Product. The following symbol may appear on the product:

	Direct current (DC)		Warning, risk of electric shock
	Alternating current (AC)		Caution, risk of danger (refer to this manual for specific Warning or Caution information)
	Both direct and alternating current		Conforms to European Union directives
	Ground terminal		Chassis Ground

CAT I (1000V)	IEC Measurement Category I. The maximum measurable voltage is 1000 Vpk in the HI -LO terminal.
CAT II (600V)	IEC Measurement Category II. Inputs may be connected to AC mains power (up to 600 VAC) under Category II overvoltage conditions.
	This product complies with the WEEE Directive (2002/96/EC) marking equipment. The affixed product label indicates that you must not discard this electrical/electronic product in domestic household waste.

General Safety Requirements

Before any operations, please read the following safety precautions to avoid any possible bodily injury and prevent this product or any other products connected from damage. In order to avoid any contingent danger, this product is only used within the range specified.

- Check AC power input setting according to the standards in your own country (see page 13, *AC Power Input Setting*).
- **Use Proper Power Cord.** Use only the power cord supplied with the product and certified to use in your country.
- **Product Grounded.** This instrument is grounded through the power cord grounding conductor. To avoid electric shock, the grounding conductor must be grounded. The product must be grounded properly before any connection with its input or output terminal.
- **Limit operation to the specified measurement category, voltage, or amperage ratings.**
- **Check all Terminal Ratings.** To avoid instrument damage and the risk of electric shock, check all the Measurement Limits and markers of this product. Refer to the user's manual for the Measurement Limits before connecting to the instrument. Do not exceed any of the Measurement Limits defined in the following section.
- **Do not operate without covers**. Do not operate the instrument with covers or panels removed.
- **Use Proper Fuse.** Use only the specified type and rating fuse for this instrument.
- **Avoid exposed circuit**. Do not touch exposed junctions and components when the instrument is powered.
- **Do not operate if in any doubt.** If you suspect damage occurs to the instrument, have it inspected by qualified service personnel before further operations.
- **Use your instrument in a well-ventilated area.** Inadequate ventilation may cause increasing of temperature or damages to the device. Please keep well ventilated and inspect the intake regularly.
- **Do not operate in wet conditions.** In order to avoid short circuiting to the interior of the device or electric shock, please do not operate in a humid environment.
- **Do not operate in an explosive atmosphere.**
- **Keep product surfaces clean and dry.**
- **Only the qualified technicians can implement the maintenance.**

Measurement Limits

The protection circuitry of the multimeter can prevent damage to the instrument and protect against the danger of electric shock, when the Measurement Limits are not exceeded. To ensure safe operation of the instrument, do not exceed the Measurement Limits shown on the front panel, it is defined as follows:

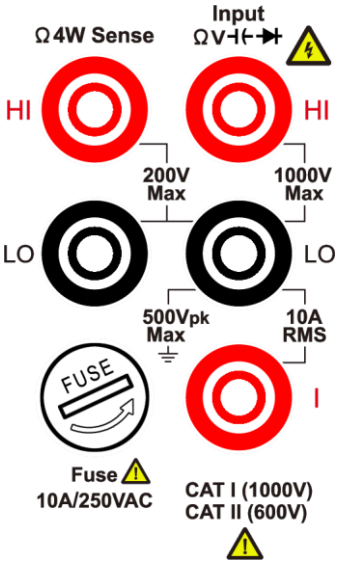

The user-replaceable 10 A current-protection fuse is on the front panel. To maintain protection, replace fuse only with fuse of the specified type and rating. About the specified type and rating of the fuse, please refer to "7 Current Terminal Fuse" in "Front Panel Overview" on page 9.

Main Input Terminals (HI Input and LO Input) Measurement Limits

The HI and LO input terminals are used for voltage, resistance, continuity, frequency (period), capacitance, diode, and temperature test measurements. Two Measurement Limits are defined for these terminals:

- **HI Input to LO Input Measurement Limit**

  The Measurement Limit from HI Input to LO Input is 1000 VDC or 750 VAC, which is also the maximum voltage measurement. This limit can also be expressed as 1000 Vpk maximum.

- **LO Input to Ground Measurement Limit**

  The LO input terminal can safely "float" a maximum of 500 Vpk relative to ground, where ground is defined as the Protective Earth Conductor in the AC mains power cord connected to the instrument.

As implied by the above limits, the Measurement Limit for the HI input terminal is a maximum of 1500 Vpk relative to ground when LO Input is at its maximum of 500 Vpk relative to ground.

Current Input Terminal (I) Measurement Limits

The Measurement Limit from the current input terminal (I) to the LO Input terminal is 10 A (DC or AC). Note that the current input terminals will always be at approximately the same voltage as the LO Input terminal, unless a current protection fuse is open.

Sense Terminals (HI Sense and LO Sense) Measurement Limits

The HI and LO sense terminals are used for four-wire resistance measurements.

The Measurement Limit from HI Sense to LO Input is 200 Vpk.

The Measurement Limit from HI Sense to LO Sense is 200 Vpk.

The Measurement Limit from LO Sense to LO Input is 2 Vpk.

Note: The 200 Vpk limit on the sense terminals is the Measurement Limit. Operational voltages in resistance measurements are much lower – up to ± 12 V in normal operation.

Measurement Category

The safety rating of the multimeter:

1000 V, CAT I

IEC Measurement Category I. The maximum measurable voltage is 1000 Vpk in the HI -LO terminal.

600 V, CAT II

IEC Measurement Category II. Inputs may be connected to AC mains power (up to 600 VAC) under Category II overvoltage conditions.

Measurement category definition

Measurement CAT I applies to measurements performed on circuits not directly connected to the AC mains. Examples are measurements on circuits not derived from the AC mains and specially protected (internal) mains- derived circuits.

Measurement CAT II applies to protect against transients from energy-consuming equipment supplied from the fixed installation, such as TVs, PCs, portable tools, and other household circuits.

Measurement CAT III applies to protect against transients in equipment in fixed equipment installations, such as distribution panels, feeders and short branch circuits, and lighting systems in large buildings.

Measurement CAT IV applies to measurements performed at the source of the low- voltage installation. Examples are electricity meters and measurements on primary over current protection devices and ripple control units.

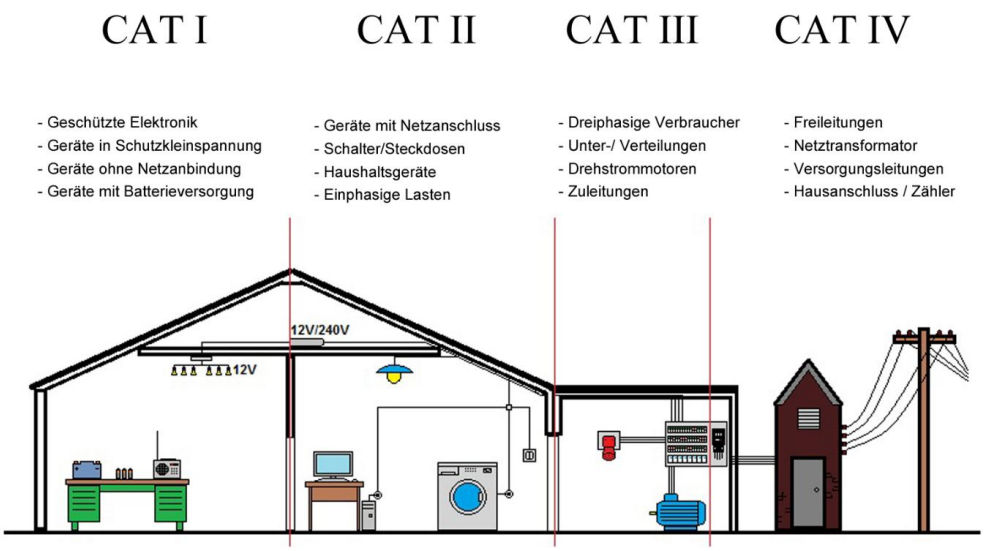

2. Quick Start

General Inspection

After you get a new multimeter, it is recommended that you should make a check on the instrument according to the following steps:

1. **Check whether there is any damage caused by transportation.**

   If it is found that the packaging carton or the foamed plastic protection cushion has suffered serious damage, do not throw it away first till the complete device and its accessories succeed in the electrical and mechanical property tests.

2. **Check the Accessories**

   The supplied accessories have been already described in the *Appendix A: Enclosure* of this Manual. You can check whether there is any loss of accessories with reference to this description. If it is found that there is any accessory lost or damaged, please get in touch with the distributor of PEAKTECH responsible for this service or the PEAKTECH's local offices.

3. **Check the Complete Instrument**

   If it is found that there is damage to the appearance of the instrument, or the instrument can not work normally, or fails in the performance test, please get in touch with the PEAKTECH's distributor responsible for this business or the PEAKTECH's local offices. If there is damage to the instrument caused by the transportation, please keep the package. With the transportation department or the PEAKTECH's distributor responsible for this business informed about it, a repairing or replacement of the instrument will be arranged by the PEAKTECH.

Dimensions

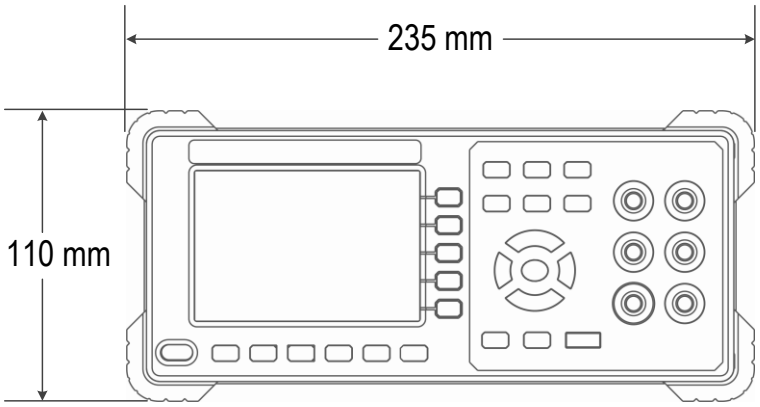

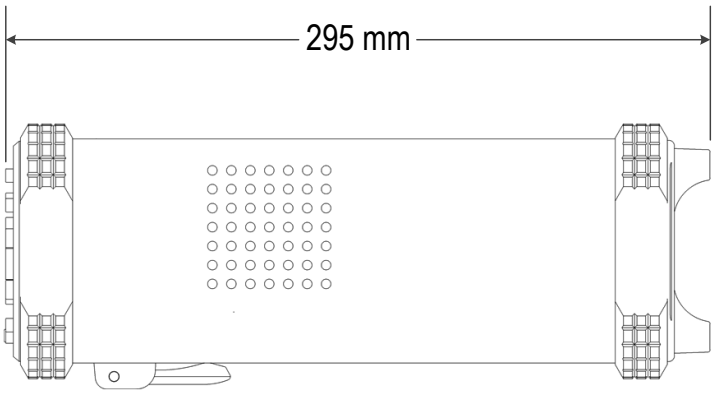

Foot Stool Adjustment

Unfold the foot stool on the bottom of the multimeter.

Front Panel Overview

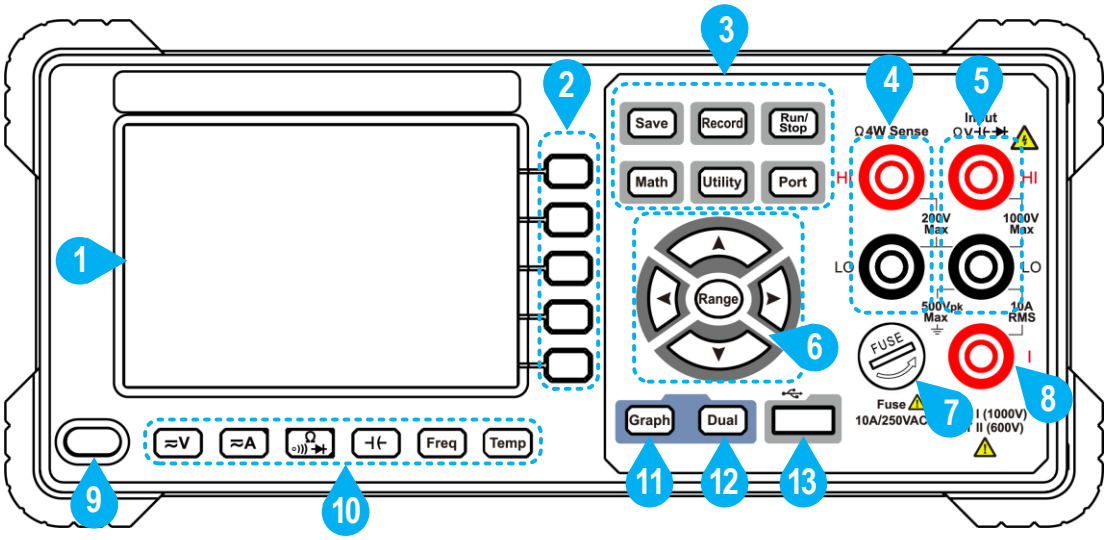

Figure 2-1 Front panel overview

Item	Name	Description
1	**LCD**	Display the user interface
2	**Menu selection Keys**	Activate the corresponding menu
3	**Operation Keys**	
	Save	Collect data in manual record. The instrument saves current reading each time the **Save** key is pressed. See page 46, *Manual Record*.
	Record	Access menus of manual record and auto record. See page 46, *Data Record Function*.
	Run/Stop	When the trigger source is set as **Auto**, start or stop auto trigger. When the trigger source is set as **Single**, the instrument issues one trigger each time this key is pressed.

	Math	Perform math operations (statistic, limits, dB/dBm, REL) on the measurement results.
	Utility	Set the auxiliary system function, including Language, Backlight, Clock, SCPI, Set to default, System information, LCD test, Key test.
	Port	Set Serial, Trigger, Output connector, Net Type.
4	**HI and LO Sense Terminals**	Signal input terminals, used for four-wire resistance measurements.
5	**HI and LO Input Terminals**	Signal input terminals, used for voltage, resistance, continuity, frequency (period), capacitance, diode, and temperature test measurements.
6	**Range/Direction Keys**	When the Range softkey is shown on the right menu, you can press the Range key to switch between auto and manual range. Press ▲▼ to enable manual range, and increase or decrease the measurement range. When setting a parameter, press ◀▶ to move the cursor, press ▲▼ to increase or decrease the value.
7	**Current Terminal Fuse**	The rating is 10 A, 250 VAC. To replace the fuse: Turn off the multimeter and remove the power cord. Use a flat-blade screw driver to turn the fuse holder counter-clockwise, and pull out the fuse holder. Put the new specified fuse into the fuse holder, and insert the assembly back into the instrument, turning the fuse holder clockwise to lock it in place.

8	**AC/DC Current Input Terminals**	Signal input terminals, used for AC/DC current measurements.
9	**Power button**	Turn on/off the multimeter.
10	**Measurement Function Keys**	≈V DC or AC voltage measurements ≈A DC or AC current measurements Ω Resistance, continuity, and diode measurements ⊣⊢ Capacitance measurements Freq Frequency/Period measurements Temp Temperature measurements
11	**Graph**	Choose what is displayed: number, bar meter, trend chart, or histogram.
12	**Dual**	Press this key to display the function list on the right menu, select a function, if the function is supported, the reading will be displayed in the Vice Display.
13	**USB Connector**	Connect with an external USB device, such as connect a USB memory device to the instrument.

Rear Panel Overview

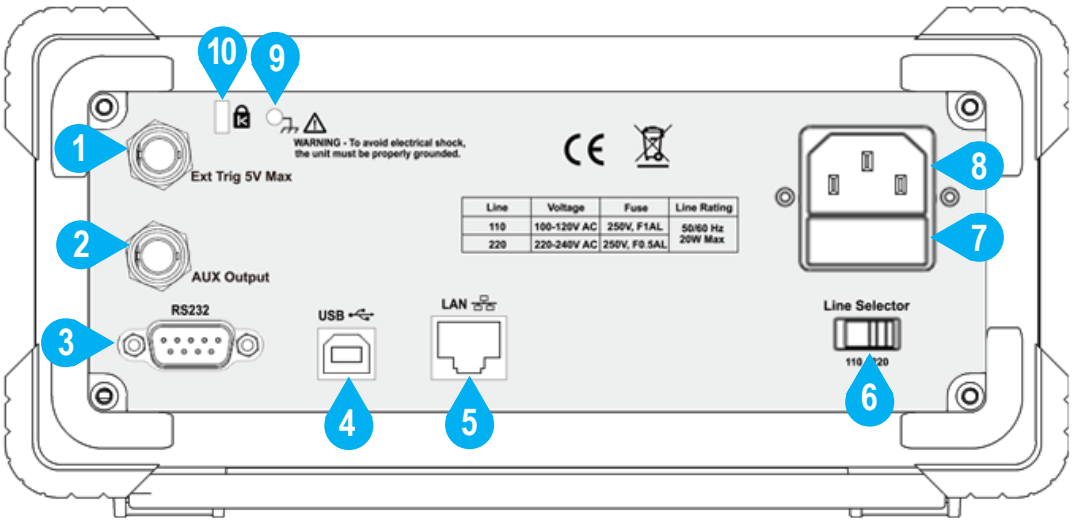

Figure 2-2 Rear panel overview

Item	Name	Description
1	**External Trigger Input**	Trigger the multimeter by connecting a trigger pulse. The external trigger source must be selected. (Port → Trigger → Source (External))
2	**Auxiliary Output Connector**	Defaults to Voltmeter Measurement Complete Output, outputs a pulse whenever the multimeter finishes taking a measurement to allow you to signal other devices. This connector can also be configured to output a pulse when limits are exceeded in Math limits function (Port → Output → Output (P/F)).
3	**RS232**	Connect the PC through this interface.
4	**USB (type B) Connector**	This can be used to connect a USB type B controller. Connect with an external device, such as connected to a PC and controlled via PC software.
5	**Local Area Network (LAN) Connector**	The multimeter can be connected to the network for remote control via this connector.

6	**AC Mains Line Voltage Selector**	Select a proper voltage scale according to the AC supply used. Switch between 110 V and 220 V.
7	**Line Fuse**	Use the specified fuse according to the voltage scale. To replace the fuse, see page 68, *Appendix C: Line Fuse Replacement*. **Voltage** / **Fuse** 100 - 120 V AC / 250 V, F1AL 220 - 240 V AC / 250 V, F0.5AL
8	**AC Mains Input**	AC mains input connector.
9	**Chassis Ground Screw**	To ground the chassis.
10	**Instrument Cable Lock**	You can lock the instrument to a fixed location using the security lock (please buy it yourself) to secure the instrument.

User Interface

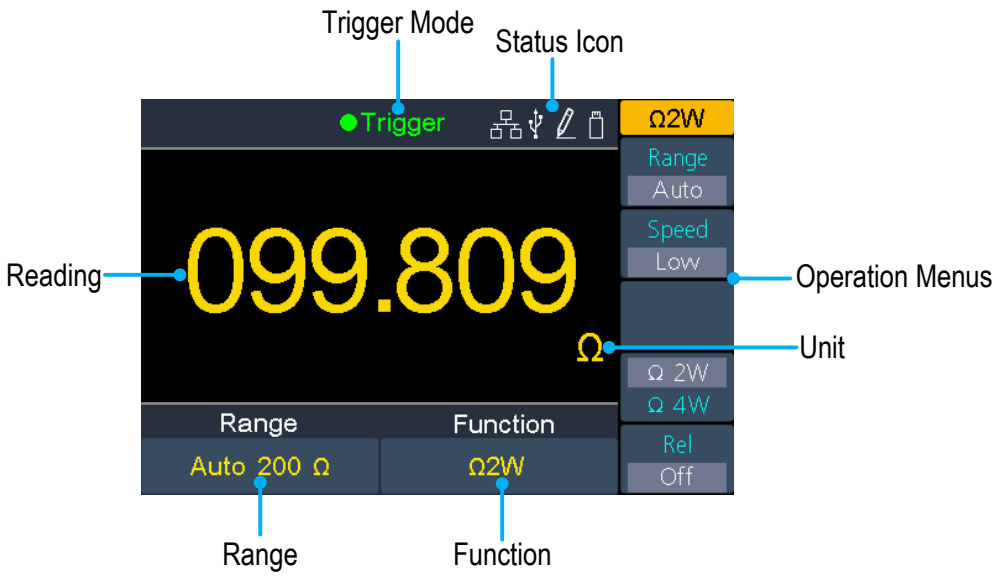

Trigger Mode

Display	Description
Trigger	Auto trigger
Ext Trigger	External trigger

Status Icon

Icon	Description
	LAN is connected
	Connect as a slave device with PC
	Auto record function is running
	USB memory device is detected
	Manual record

Figure 2-3 User interface (Single display)

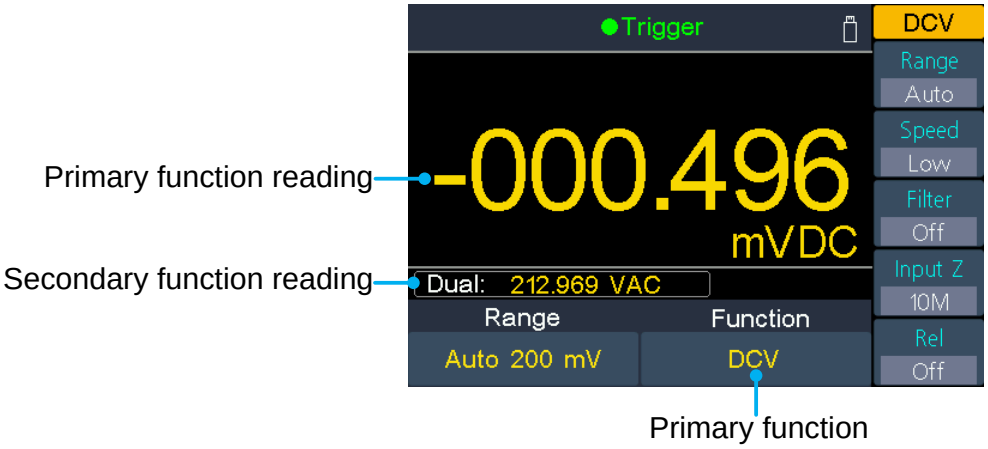

Figure 2-4 User interface (Dual display)

AC Power Input Setting

Adopt 100 - 120 VAC or 220 - 240 VAC power source. Users should regulate the voltage scale of the **AC Mains Line Voltage Selector** according to the standards in their own country (see *Figure 2-2 Rear panel overview*) at the rear panel, and use an appropriate fuse.

Voltage	Fuse
100 - 120 V AC	250 V, F1AL
220 - 240 V AC	250 V, F0.5AL

To change the voltage scale of the instrument, do the following steps:

(1) Turn off the power button at the front panel, and remove the power cord.

(2) Check if the fuse installed before leaving factory (250 V, F0.5AL) can match with the selected voltage scale; if not, change the fuse. (See page 68, *Appendix C: Line Fuse Replacement.*)

(3) Regulate the **AC Mains Line Voltage Selector** to the desired voltage scale.

Power On

(1) Connect the instrument to the AC supply using the supplied power cord.

Warning:

To avoid electric shock, the instrument must be grounded properly.

(2) Press down the **power button** at the front panel, the screen shows the boot screen.

Measurement Connections

After selecting the desired measurement function, please connect the signal (device) under test to the multimeter according to the method below. To avoid instrument damage, do not discretionarily switch the measurement function when measuring.

DC Voltage Measurement

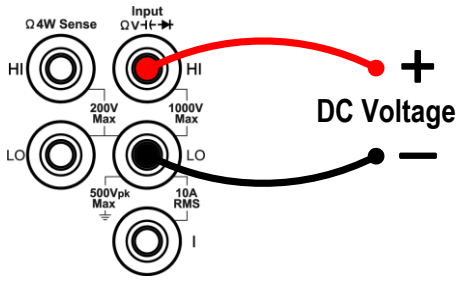

AC Voltage Measurement

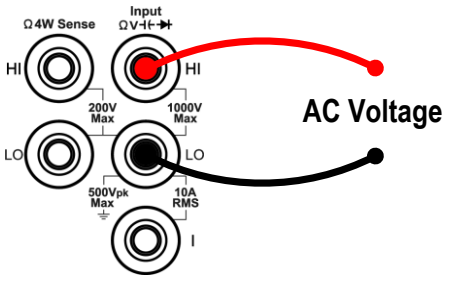

DC Current Measurement

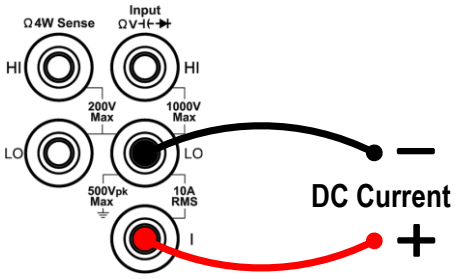

AC Current Measurement

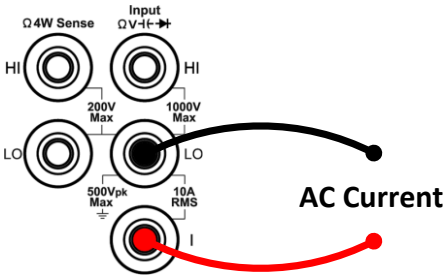

2-wire Resistance Measurement

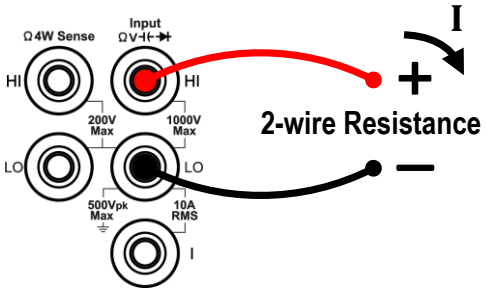

4-wire Resistance Measurement

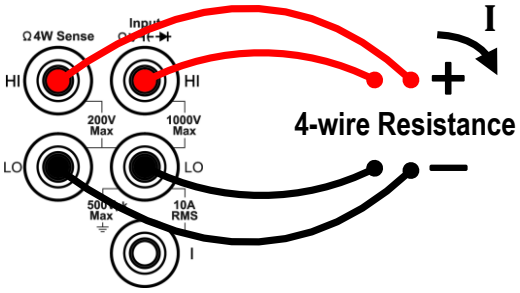

Continuity Test

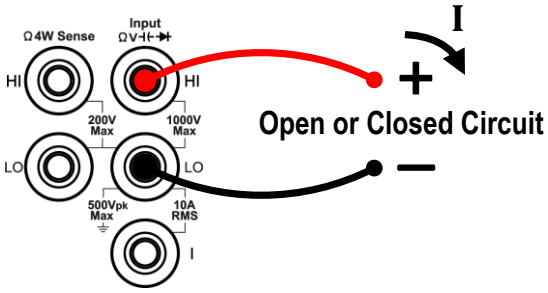

Diode Measurement

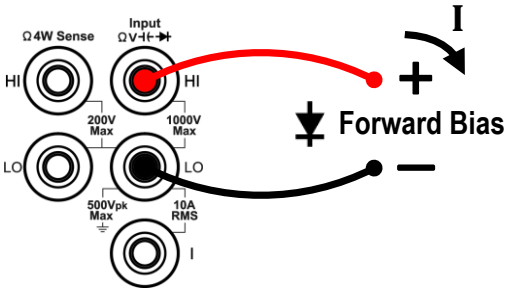

Capacitance Measurement

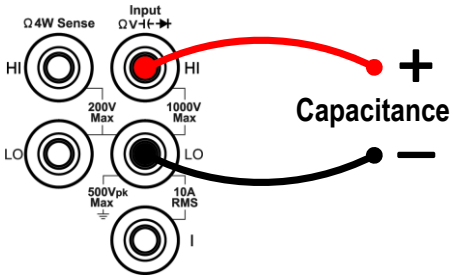

Frequency/Period Measurement

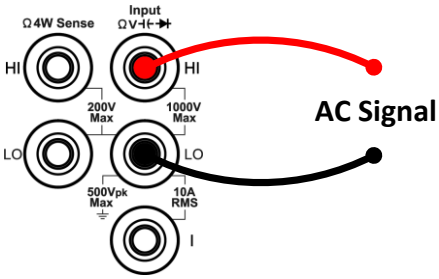

Temperature Measurement

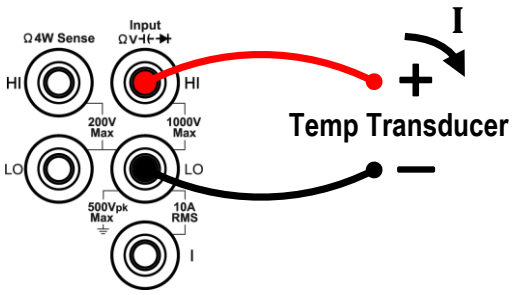

3. Functions and Operations

To Set The Range

The instrument provides auto and manual range. In auto range, the multimeter selects a proper range automatically according to the input signal; in manual range, you can use the front panel key or menu softkey to set the range. The auto range can bring a lot of convenience for users while the manual range provides higher reading precision.

1st Method: Use the front panel key to set the range.

When the Range softkey is shown on the right menu, you can press the Range key to switch between auto and manual range. Press ▲▼ to enable manual range, and increase or decrease the measurement range.

2nd Method: Select the range in the measurement function menu.

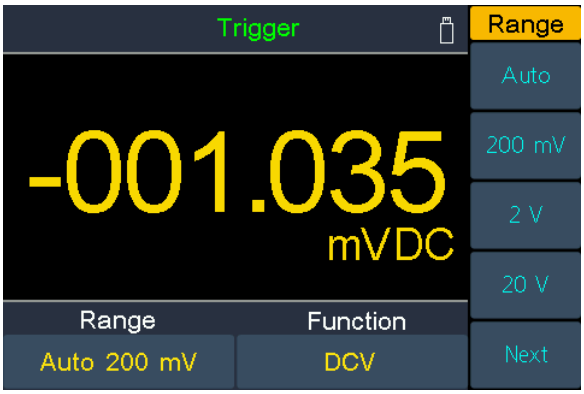

Select auto range: In the measurement function menu, press the Range softkey, select Auto.

Select manual range: In the measurement function menu, press the Range softkey, select a range except Auto.

Note:

- When the input signal exceeds the current range, "overload” will be displayed.
- By default, the range is set to Auto at power-on or after a reset.
- Auto range is recommended if you are not sure about the measurement range in order to protect the instrument and obtain accurate data.
- The range of continuity test is fixed at 2 kΩ; the range of diode measurement is fixed at 2 V.

Measurement Speed and Resolution

The instrument provides three types of measurement speed:

"**Low**" speed is 5 reading/s; "**Mid**" speed is 50 reading/s; "**High**" speed is 150 reading/s.

In DCV, ACV, DCI, ACI and 2-wire / 4-wire resistance measurements, the measurement speed is selectable.

The reading resolution of P4095 is 4½.

The reading resolution of P4096 can be 4½ or 5½ digits. The selection of measurement speed affects the reading resolution. The multimeter automatically selects a reading resolution according to the current measurement settings.

Relationship between measurement speed and reading resolution:

<table>
<tr><th>Function</th><th>Measurement speed</th><th colspan="2">Reading resolution</th></tr>
<tr><td rowspan="3">DCV
ACV
DCI
ACI
2-wire/4-wire resistance</td><td rowspan="2">"Low" speed</td><td>P4095</td><td>4½ digits</td></tr>
<tr><td>P4096</td><td>5½ digits</td></tr>
<tr><td>"Mid" speed
"High" speed</td><td colspan="2">4½ digits</td></tr>
<tr><td>Continuity test</td><td>Fixed at "High" speed</td><td colspan="2">4½ digits</td></tr>
<tr><td>Diode</td><td>Fixed at "High" speed</td><td colspan="2">4½ digits</td></tr>
<tr><td>Capacitance</td><td>Fixed at "Mid" speed</td><td colspan="2">4½ digits
(only display the first four digits)</td></tr>
<tr><td>Frequency/Period</td><td>Fixed at "Mid" speed</td><td colspan="2">4½ digits</td></tr>
<tr><td>Temperature</td><td>Fixed at "Mid" speed</td><td colspan="2">4½ digits</td></tr>
</table>

Basic Measurement Functions

Measuring DC Voltage

This section describes how to configure DC voltage measurements.

Operating Steps:

1. **Enable the DCV measurement.**

   Press ≈V on the front panel to enter DCV measurement mode.

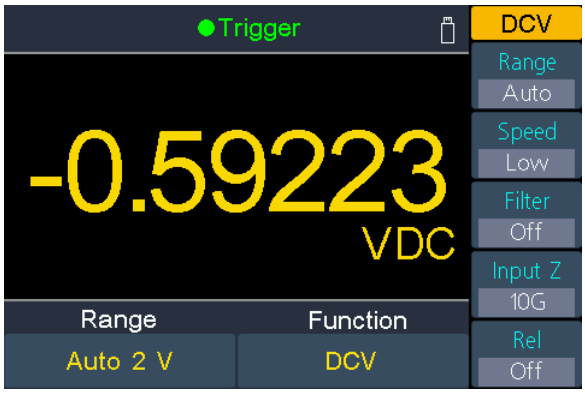

2. **Connect the test lead.**

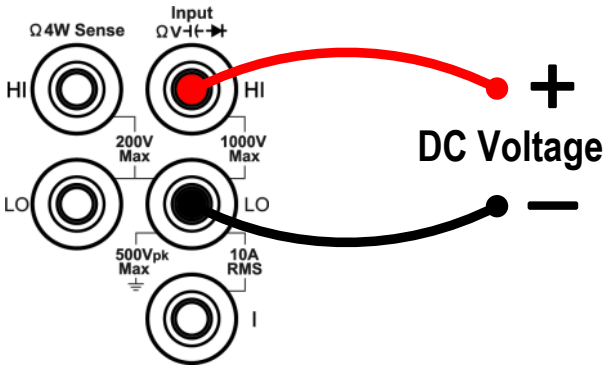

3. **Set the range.**

   Press the Range softkey to set the range. Auto range automatically selects the range for the measurement based on the input.

   Note:

   - 1000 V input protection is available in all ranges.
   - P4096: 20% over range for all ranges except 1000 V range.
     P4095: 10% over range for all ranges except 1000 V range.

- If the reading exceeds 1050 V in 1000 V range, "overload" will be displayed.

4. **Set the measurement speed.**

   Press the Speed softkey to switch between Low, Mid or High. See page 19, *Measurement Speed and Resolution*.

5. **Set the filter.** (Optional operation)

   Press the Filter softkey to turn on or off the AC filter. When the AC component exists in the inputted DC signal, it can be filtered by the AC filter to make the measurement data more exactly.

6. **Set the input impedance.** (Optional operation, only for 200 mV and 2 V range)

   Press the Input Z softkey to select "10M" or "10G", specify the input impedance to the test leads. The default is "10M".

   In the range of 200 mV or 2 V, you can choose "10G" to reduce the loading error to the measured object caused by the multimeter (refer to *Loading Errors (DC Voltage)* on page 57).

   Note:

   - **10M**: Set the input impedances in all ranges to 10 MΩ.
   - **10G**: Set the input impedances in ranges of 200 mV and 2 V to 10 GΩ, while in ranges of 20 V, 200 V and 1000 V, the impedances are still 10 MΩ.

7. **Set the relative value.** (Advanced operation)

   Press the Rel softkey to turn on or off the relative operation. For relative operation, the multimeter subtracts the pre-specified value of REL operation from the actual measurement result and displays the result. See page 41, *Relative Value*.

Measuring AC Voltage

This section describes how to configure AC voltage measurements.

Operating Steps:

1. **Enable the ACV measurement.**

   Press ≈V on the front panel, press it again to enter ACV measurement mode.

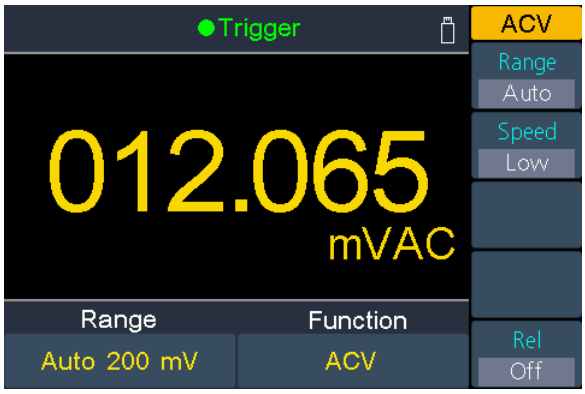

2. Connect the test lead.

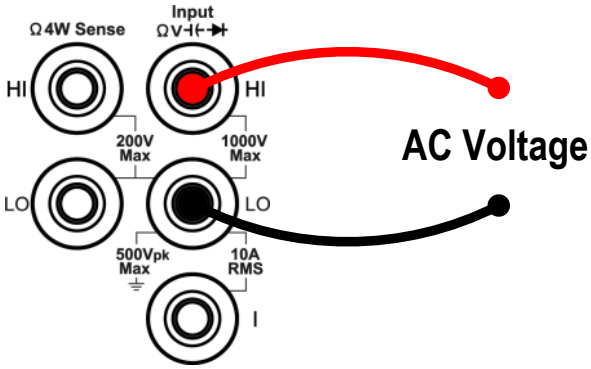

3. Set the range.

Press the Range softkey to set the range. Auto range automatically selects the range for the measurement based on the input.

Note:

- 750 V input protection is available in all ranges.
- P4096: 20% over range for all ranges except 750 V range.
  P4095: 10% over range for all ranges except 750 V range.
- If the reading exceeds 787.5 V in 750 V range, "overload" will be displayed.

4. Set the measurement speed.

Press the Speed softkey to switch between Low, Mid or High. See page 19, *Measurement Speed and Resolution*.

5. Set the relative value. (Advanced operation)

Press the Rel softkey to turn on or off the relative operation. For relative operation, the multimeter subtracts the pre-specified value of REL operation

from the actual measurement result and displays the result. See page 41, *Relative Value*.

Measuring DC Current

This section describes how to configure DC current measurements.

Operating Steps:

1. **Enable the DCI measurement.**

   Press ≂A on the front panel to enter DCI measurement mode.

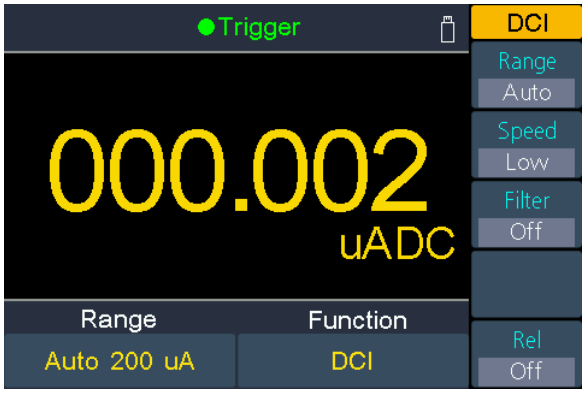

2. **Connect the test lead.**

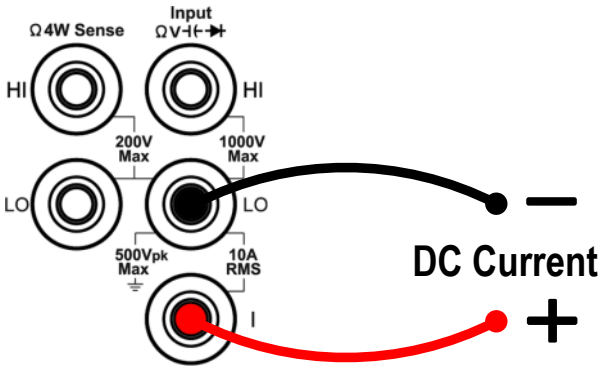

3. **Set the range.**

   Press the Range softkey to set the range. Auto range automatically selects the range for the measurement based on the input.

   Note:

   - The multimeter uses two kinds of fuses for current protection: the 10 A current input fuse on the rear panel and the built-in 12 A current input fuse.

- P4096: 20% over range for all ranges except 10 A range.
  P4095: 10% over range for all ranges except 10 A range.

- If the reading exceeds 10.5 A in 10 A range, "overload" will be displayed.

4. **Set the measurement speed.**

   Press the Speed softkey to switch between Low, Mid or High. See page 19, *Measurement Speed and Resolution*.

5. **Set the filter.** (Optional operation)

   Press the Filter softkey to turn on or off the AC filter. When the AC component exists in the inputted DC signal, it can be filtered by the AC filter to make the measurement data more exactly.

6. **Set the relative value.** (Advanced operation)

   Press the Rel softkey to turn on or off the relative operation. For relative operation, the multimeter subtracts the pre-specified value of REL operation from the actual measurement result and displays the result. See page 41, *Relative Value*.

Measuring AC Current

This section describes how to configure AC current measurements.

Operating Steps:

1. **Enable the ACI measurement.**

   Press ≂A on the front panel, press it again to enter ACI measurement mode.

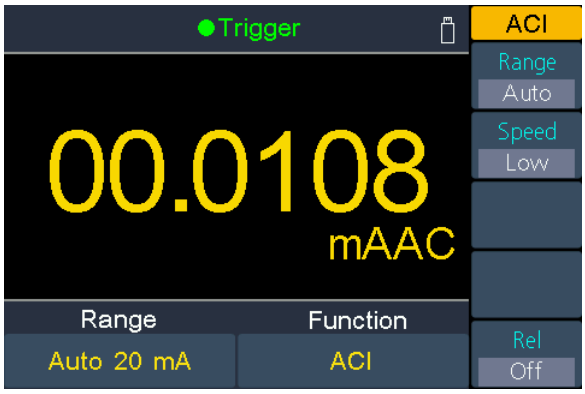

2. **Connect the test lead.**

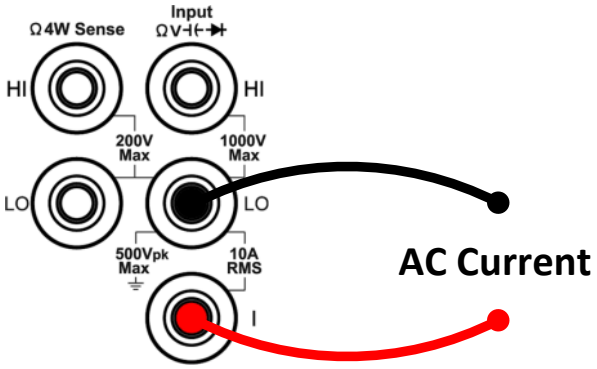

3. **Set the range.**

   Press the Range softkey to set the range. Auto range automatically selects the range for the measurement based on the input.

   Note:

   - The multimeter uses two kinds of fuses for current protection: the 10 A current input fuse on the rear panel and the built-in 12 A current input fuse.
   - P4096: 20% over range for all ranges except 10 A range.
     P4095: 10% over range for all ranges except 10 A range.
   - If the reading exceeds 10.5 A in 10 A range, "overload" will be displayed.

4. **Set the measurement speed.**

   Press the Speed softkey to switch between Low, Mid or High. See page 19, *Measurement Speed and Resolution*.

5. **Set the relative value.** (Advanced operation)

   Press the Rel softkey to turn on or off the relative operation. For relative operation, the multimeter subtracts the pre-specified value of REL operation from the actual measurement result and displays the result. See page 41, *Relative Value*.

Measuring Resistance

This section describes how to configure 2-wire and 4-wire resistance measurements.

The multimeter provides 2-wire and 4-wire resistance measurements. When the measured resistance is lower than 100 kΩ, the 4-wire resistance measurement is

recommended to reduce the measurement error caused by test lead resistance and contact resistance between the probe and the testing point, because these two resistances can not be ignored any more, compared to the measured resistance.

Operating Steps:

1. **Enable the Ω2W/Ω4W measurement.**

   Press on the front panel to enter resistance measurement mode. Press the Ω2W/Ω4W softkey to switch between Ω2W and Ω4W.

(2-wire Resistance)

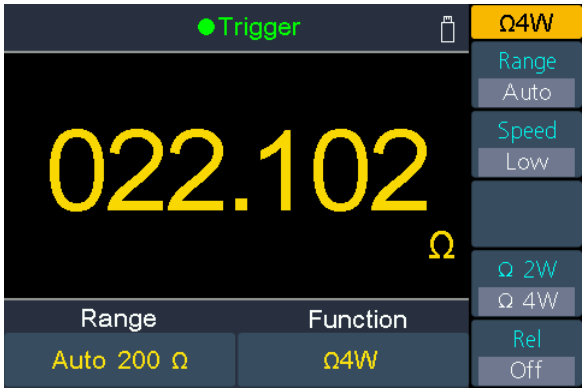

(4-wire Resistance)

2. **Connect the test lead.**

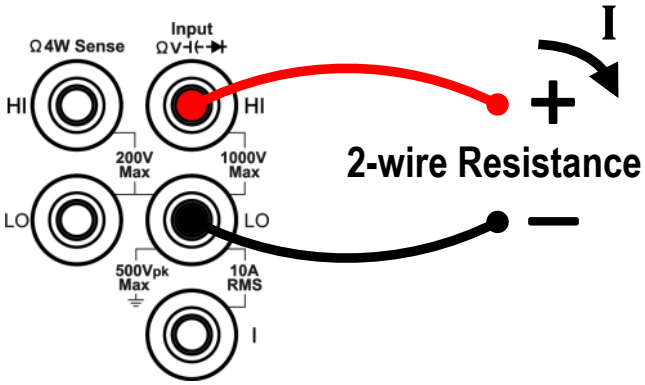

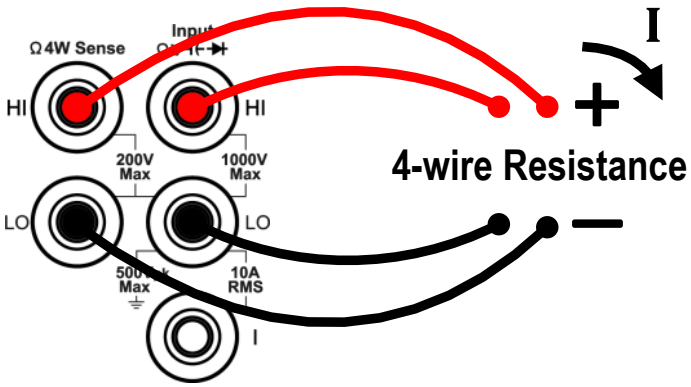

3. Set the range.

Press the Range softkey to set the range. Auto range automatically selects the range for the measurement based on the input.

Note:

- 1000 V input protection is available in all ranges.
- P4096: 20% over range for all ranges except 100 MΩ range.
  P4095: 10% over range for all ranges except 100 MΩ range.
- If the reading exceeds 105 MΩ in 100 MΩ range, "overload" will be displayed.

4. Set the measurement speed.

Press the Speed softkey to switch between Low, Mid or High. See page 19, *Measurement Speed and Resolution*.

5. Set the relative value. (Advanced operation)

Press the Rel softkey to turn on or off the relative operation. For relative operation, the multimeter subtracts the pre-specified value of REL operation from the actual measurement result and displays the result. See page 41, *Relative Value*.

Tip:

- If the measured resistance is small, relative operation is recommended in order to reduce the error caused by test lead.
- Both ends of the measured resistance should be placed far away from your hands and desks that can conduct electricity; otherwise, the measurement result might be inaccurate. The greater the measured resistance is, the greater the affect will be.

Continuity Test

This section describes how to configure continuity test.

Operating Steps:

1. **Enable the continuity test.**

   Press on the front panel, press it again to enter continuity test mode.

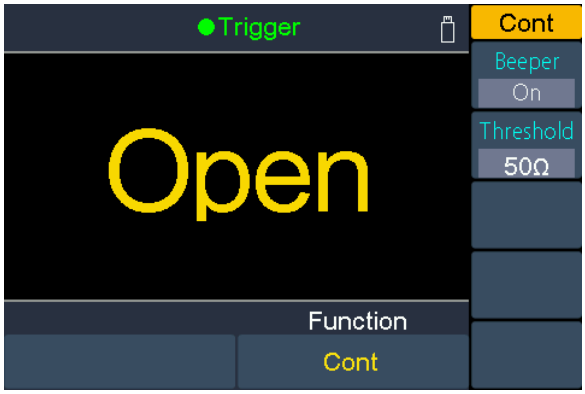

2. **Connect the test lead.**

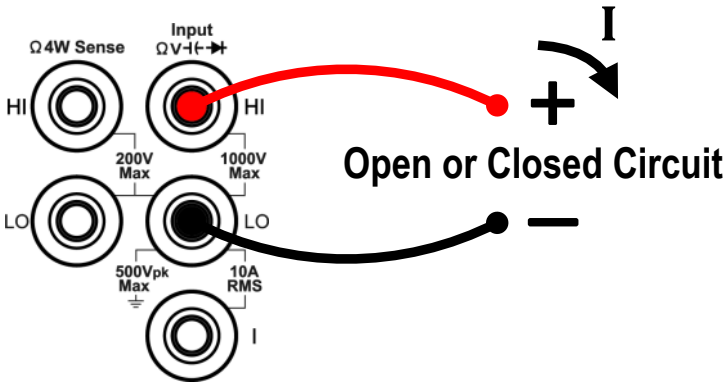

3. **Set the beeper.**

   Press the Beeper softkey to enable or disable the beeper. When the beeper is enabled, the reading is below 30 Ω, the multimeter will beep continuously.

4. **Set the short-circuit resistance.**

   Press the Threshold softkey to set the short-circuit resistance.

   Press to move the cursor, press to increase or decrease the value. The range for P4096 is 1 Ω to 2400 Ω; the range for P4095 is 1 Ω to 1100 Ω. The default is 50 Ω.

5. **Continuity measurements behave as follows:**

P4096	P4095	Display and beep
≤ Short-circuit resistance	≤ Short-circuit resistance	Displays measured resistance and beeps (if beeper enabled)
Short-circuit resistance to 2.4 kΩ	Short-circuit resistance to 1.1 kΩ	Displays measured resistance without beeping
> 2.4 kΩ	> 1.1 kΩ	Displays "Open" with no beep

Diode Test

This section describes how to configure diode test.

Operating Steps:

1. **Enable the diode test.**

   Press on the front panel, press it twice to enter diode test mode.

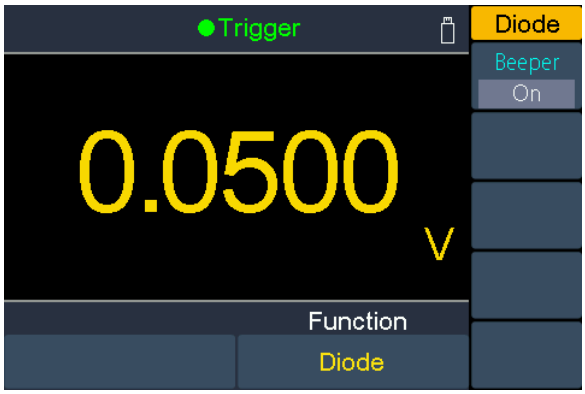

2. **Connect the test lead.**

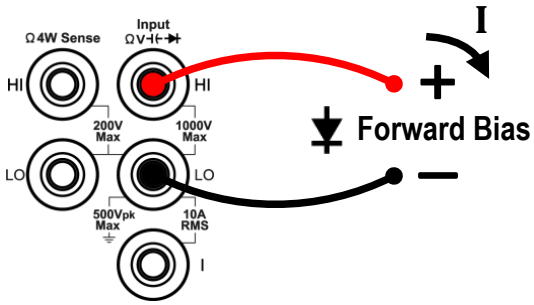

3. **Set the beeper.**

   Press the Beeper softkey to enable or disable the beeper. When the beeper is enabled, the diode is connected, the multimeter will beep continuously.

4. **Diode measurements behave as follows:**

P4096	P4095	Display and beep
0 to 2 V	0 to 3 V	Displays measured voltage, and the multimeter beeps when the voltage is below 0.7 V (if beeper enabled)
> 2 V	> 3 V	Displays "Open" with no beep

Measuring Capacitance

This section describes how to configure capacitance measurements.

Operating Steps:

1. **Enable the capacitance measurement.**

   Press ⊣⊢ on the front panel to enter capacitance measurement mode.

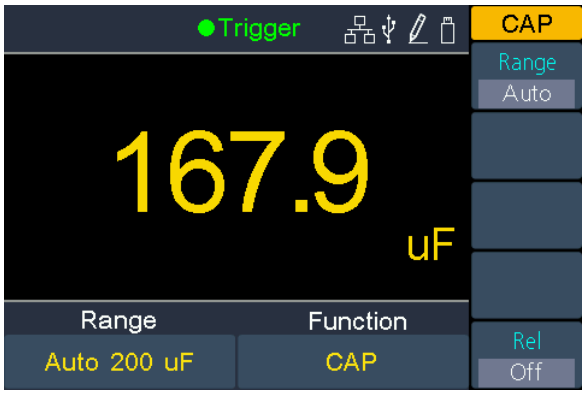

2. **Connect the test lead.**

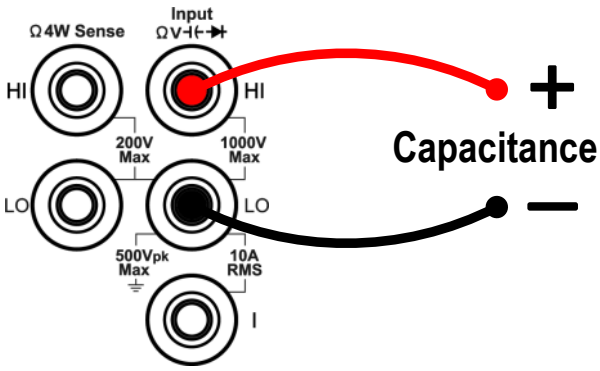

   Tip: Please short contact the two feet of an electrolytic capacitor by using a test lead before measuring the electrolytic capacitor.

3. **Set the range.**

Press the Range softkey to set the range. Auto range automatically selects the range for the measurement based on the input.

Note:

- 1000 V input protection is available in all ranges.
- P4096: 20% over range for all ranges except 10000 μF range.
  P4095: 10% over range for all ranges except 10000 μF range.
- If the reading exceeds 10500 μF in 10000 μF range, "overload" will be displayed.

4. **Set the relative value.** (Advanced operation)

   Press the Rel softkey to turn on or off the relative operation. For relative operation, the multimeter subtracts the pre-specified value of REL operation from the actual measurement result and displays the result. See page 41, *Relative Value*.

Measuring Frequency and Period

When measuring AC voltage or AC current, you can use the dual display function to obtain the measured signal's frequency and period (see page 35, *Dual Display*), or press Freq to measure the frequency or period directly.

This section describes how to configure frequency and period measurements.

Operating Steps:

1. **Enable the frequency/period measurement.**

   Press Freq on the front panel to enter frequency/period measurement mode.

   Press the Freq/Period softkey to switch between frequency and period.

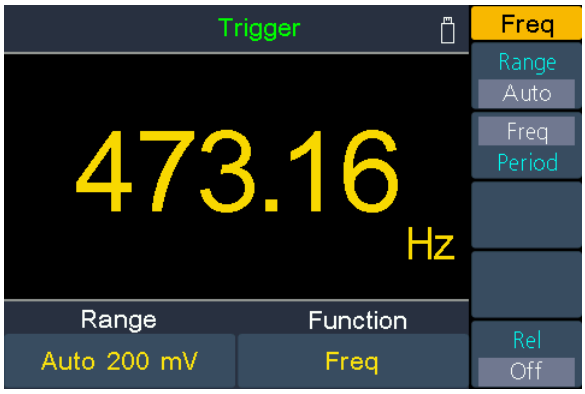

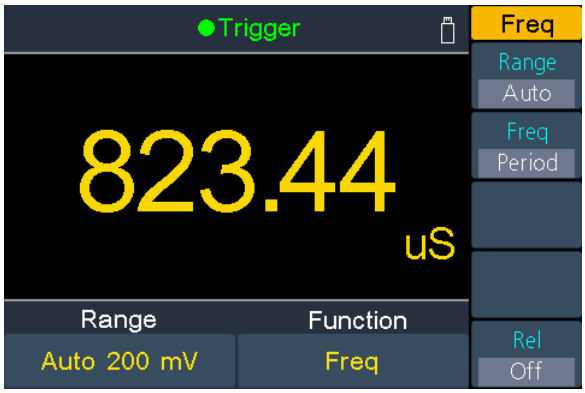

2. Connect the test lead.

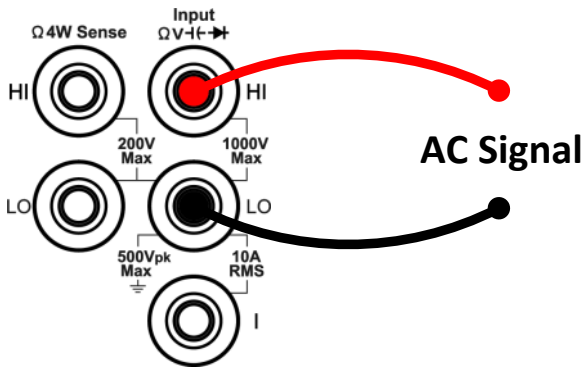

3. Set the range.

Press the Range softkey to set the range. Auto range automatically selects the range for the measurement based on the input.

Note:

- Frequency range: P4096 is 20 Hz to 1 MHz; P4095 is 20 Hz to 500 kHz.
- Period range: P4096 is 0.05 s to 1 μs; P4095 is 0.05 s to 2 μs.
- 750 V input protection is available in all ranges.

4. **Set the relative value.** (Advanced operation)

   Press the Rel softkey to turn on or off the relative operation. For relative operation, the multimeter subtracts the pre-specified value of REL operation from the actual measurement result and displays the result. See page 41, *Relative Value*.

Measuring Temperature

This section describes how to configure temperature measurements. Temperature measurements require a temperature transducer probe. The supported probes are type B, E, J, K, N, R, S, T thermocouples, and PT100, PT385 platinum RTD sensor.

Operating Steps:

1. **Enable the temperature measurement.**

   Press Temp on the front panel to enter temperature measurement mode.

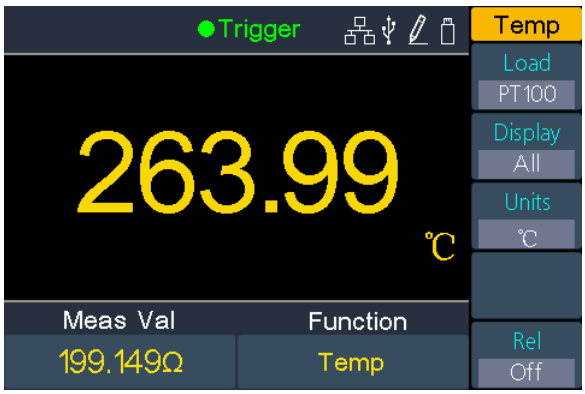

2. **Connect the test lead.**

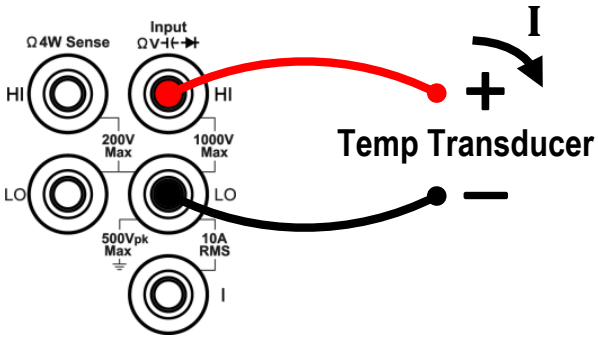

3. **Set the sensor configuration file.**

   Press the Load softkey, press ▲▼ to select thermocouple or thermo resistor. Press ▶ to access the list, press ▲▼ to select the desired

configuration file. Press the Define softkey to view the configuration; press the Done softkey to apply the sensor configurations.

4. **Set the display.**

Press the Display softkey to set the display mode of the result.

Temp Val: only the temperature value will be displayed;

Meas Val: only the measurement value will be displayed.

All: both the temperature value (on the main display) and the measurement value will be displayed.

5. **Set the temperature unit.**

Press the Units softkey to display temperature in ℃ (degrees Celsius), ℉ (degrees Fahrenheit), or K (Kelvin).

The conversion relations between these units are:

℉ = (9/5) ×℃ + 32

K ≈℃ + 273.15

6. **Set the relative value.** (Advanced operation)

Press the Rel softkey to turn on or off the relative operation. For relative operation, the multimeter subtracts the pre-specified value of REL operation from the actual measurement result and displays the result. See page 41, *Relative Value*.

Dual Display

Using dual display function, you can view the readings of two measurement functions simultaneously.

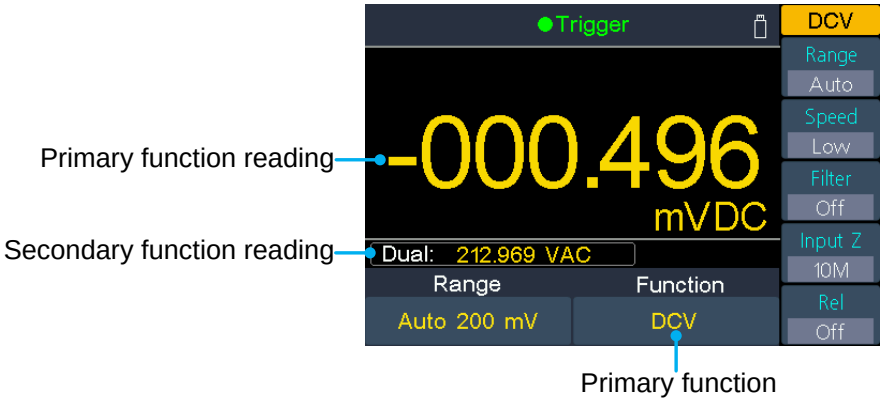

Figure 3-1 Dual Display

Operating Steps:

1. Press one of the measurement function keys to turn on the primary measurement function.
2. Press Dual on the front panel, the secondary function list is shown on the right menu, select the desired function.
3. When dual display is enabled, press Dual to switch the primary function and the secondary function. To configure the secondary function, you can switch it to the primary function, configure in the right menu, then switch back.
4. Press any of the measurement function keys to disable the dual display.

The primary measurement functions and their associated secondary measurements are: (gray back color indicates valid combinations)

		Primary measurement function								
		DCV	DCI	ACV	ACI	FREQ	PERIOD	2WR	4WR	CAP
Secondary	DCV									
	DCI									
	ACV									
	ACI									
	FREQ									
	PERIOD									
	2WR									
	4WR									
	CAP									

Note:

- The multimeter makes the primary and secondary measurements alternately, the primary and secondary readings update respectively.
- If the primary measurement uses dB or dBm scaling, the dual display can not be enabled. When the dual display is enabled, turning on dB or dBm scaling will automatically disable the dual display.
- When the dual display is enabled, manual record function can save both of the primary and secondary readings, auto record function can only save the primary reading.

Triggering

The multimeter provides three types of triggers: auto, single and external.

Auto Trigger

Press the front panel Port key, press the Trigger softkey, press the Source softkey to select Auto. When Auto trigger is used, the instrument continuously takes measurements, automatically issuing a new trigger as soon as a measurement is completed.

Press the Delay softkey to select Auto or Manual.

● **Auto Delay**

The instrument automatically determines the delay based on function, range and measurement speed.

● **Manual Delay**

The first sample starts one trigger delay time after the trigger. The second sample starts one sample interval after the start of the first sample, and so on.

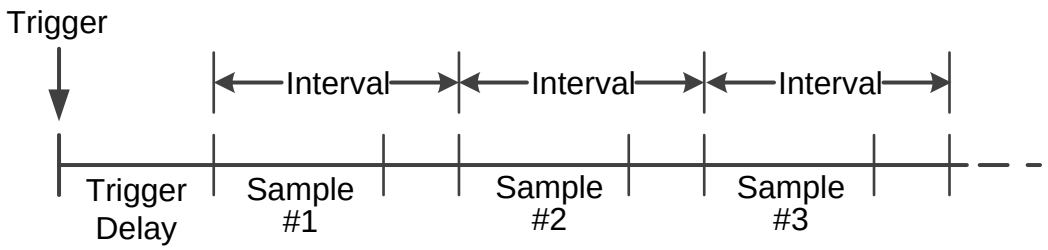

Set the trigger delay time: Press the Delay softkey to select Manual, press ◄ ► to move the cursor, press ▲▼ to increase or decrease the value. The range is 1 ms to 999,999 ms.

Set the number of samples: The multimeter takes the specified number of readings each time a trigger signal is received. Press the Samples trigger softkey, press ◄ ► to move the cursor, press ▲▼ to increase or decrease the value. The range is 1 to 999,999.

Single Trigger

Press the front panel Port key, press the Trigger softkey, press the Source softkey to select Single. When Single trigger is used, the instrument takes one or specified number of readings each time the front panel Run/Stop key is pressed.

- Auto delay is applied for single trigger, the instrument automatically determines the delay based on function, range and measurement speed.

- You can set the number of samples for single trigger. The multimeter takes the specified number of readings each time a trigger signal is received. Press the Samples trigger softkey, press ◄► to move the cursor, press ▲▼ to increase or decrease the value. The range is 1 to 999,999.

External Trigger

Press the front panel Port key, press the Trigger softkey, press the Source softkey to select External. When External trigger is used, the multimeter receives the trigger pulse from the **[Ext Trig]** connector at the rear panel, triggers at the specified edge of the pulse signal and acquires measured data.

- Auto delay is applied for external trigger, the instrument automatically determines the delay based on function, range and measurement speed.

- When using external trigger, you can set the edge type for the pulse from the **[Ext Trig]** connector at the rear panel. The multimeter will trigger on the specified type of edge. Press the Trg Edge softkey to select Rising or Falling.

Math

The multimeter provides these math functions: statistics, limits, dB/dBm and relative.

Statistics

Statistics calculates the min, average, max, span, standard deviation and number of samples of readings during the measurement.

Press the front panel Math key, press the Statistics softkey, press the Statistics softkey to select Show.

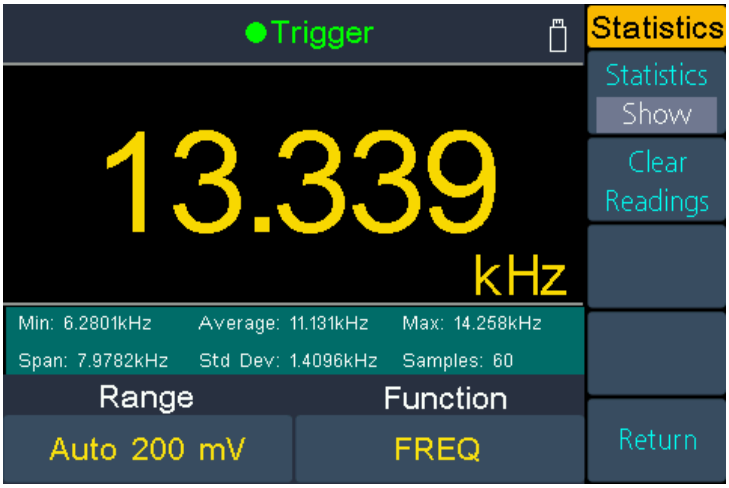

Remarks

● The **Span** value is the **Max** minus the **Min**.

● Press the Clear Readings softkey to clear reading memory and restart statistics.

Limits

Limit checking indicates how many samples have exceeded specified limits, and indicates

the signal testing result exceeded specified limits. The [**AUX Output**] connector at the rear panel can be configured to output a pulse when the limits are exceeded (see page 49, *Output*).

Press the front panel Math key, press the Limits softkey to access the limits menu.

● Press the Limits softkey to enable or disable limits.

- Use the High or Low softkey to specify the limits as high and low values. Press to switch to the Center or Span softkey to specify the limits as a span around a center value. For example, a Low limit of -5 V and a High limit of +10 V are equivalent to a Center of 2.5 V and a Span of 15 V. When setting a parameter, press to move the cursor, press to increase or decrease the value.
- Press the Clear softkey to clear all current readings and restart limit checking.

Limit Indications: The red background color (shown below) indicates that the displayed measurement exceeds the limits, and the multimeter beeps (if beeper enabled).

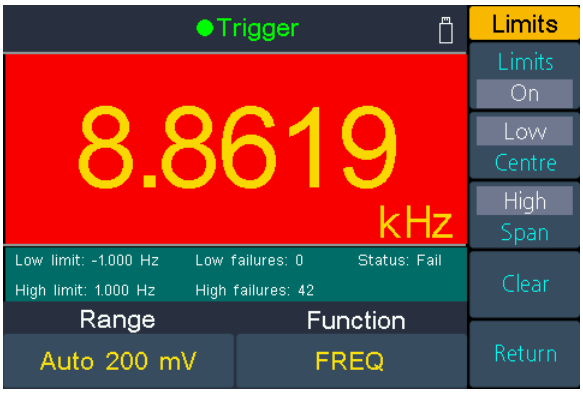

dB/dBm

The dB and dBm scaling functions only apply to ACV and DCV measurements. The functions allow you to scale measurements relative to a reference value.

Press the front panel Math key, press the dB/dBm softkey to access the menu.

Press the dB/dBm softkey to enable or disable the function.

Press the dB/dBm softkey to

● dBm Function

dBm function represents the absolute value of the power. The function calculates the power of the reference resistance according to the measured voltage, relative to 1 mW:

$$\mathbf{dBm = 10 \times \log_{10} (reading^2 / reference\ resistance / 1\ mW)}$$

Press the Ref R softkey to select the reference resistance. The value may be 50, 75, 93, 110, 124, 125, 135, 150, 250, 300, 500, 600 (default), 800, 900, 1000, 1200, or 8000 Ω.

● **dB Function**

dB represents the relative value which is used in the relative operation of dBm value. When enabled, the multimeter calculates the dBm value of the reading and subtracts the preset dB from this value and then displays the result:

$$\mathbf{dB = 10 \times Log_{10} (reading^2 / reference\ resistance / 1\ mW) - dB\ preset}$$

Press the Ref R softkey to select the reference resistance. The value may be 50, 75, 93, 110, 124, 125, 135, 150, 250, 300, 500, 600 (default), 800, 900, 1000, 1200, or 8000 Ω.

Press the dB Ref Value softkey to select the relative value. The relative value must be from -120 to +120 dBm (default 0).

Relative Value

When the relative operation is turned on, the reading displayed on the screen in relative operation is the difference between measured and preset values. The value is specific to the present function and will persist even if you leave this function and return to it later.

Reading = Measured value – Preset value

Press the front panel Math key, press the Rel softkey, set the preset value of the present function.

In the measurement function menu, press the Rel softkey to turn on or off the relative operation.

Display

Press the front panel Graph key to access the menu, press the Display softkey to select the display type as number, bar meter, trend chart, or histogram.

In each display type, you can press Dual on the front panel, and select the secondary function. For example, for the DCV measurement function, you can select ACV as the secondary measurement function. See page 35, *Dual Display*.

Number

Press the front panel Graph key to access the menu, press the Display softkey to select Number, the instrument displays readings as a number. It is the default display type.

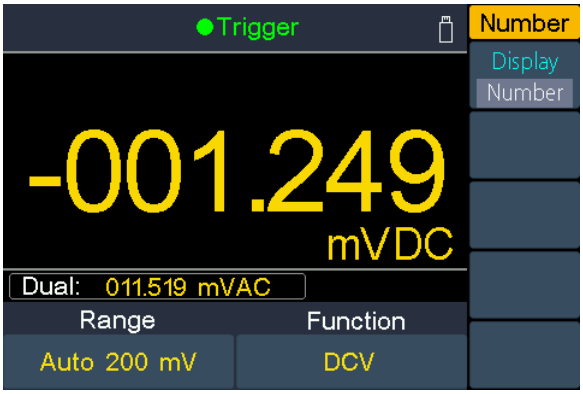

Bar Meter

Press the front panel Graph key to access the menu, press the Display softkey to select BarMeter. The bar meter adds a moving bar below the standard Number display.

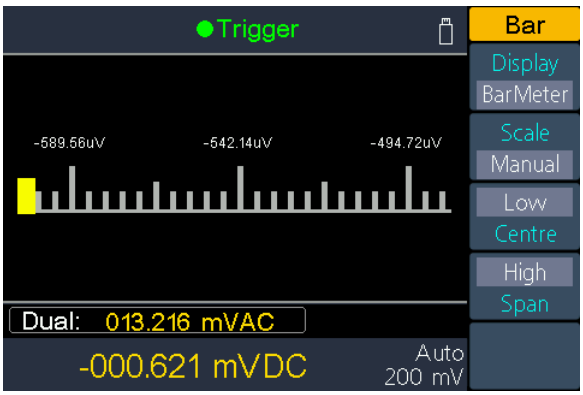

Press the Scale softkey to select Default or Manual.

Default: Set the scale to equal the measurement range. For example, for the DCV measurement function, the horizontal scale will be set as -200 mV to 200 mV when the present range is 200 mV.

Manual: Allow you to configure the scale either as **High** and **Low** values or as a **Span** around a **Center** value. For example, a scale that goes from a Low of -50 mV to a High of 100 mV could also be specified as a Center of 25 mV with a Span of 150 mV.

Trend Chart

Press the front panel Graph key to access the menu, press the Display softkey to select Trend. The trend chart shows data trends over time, users can directly observe the variation of the measured data.

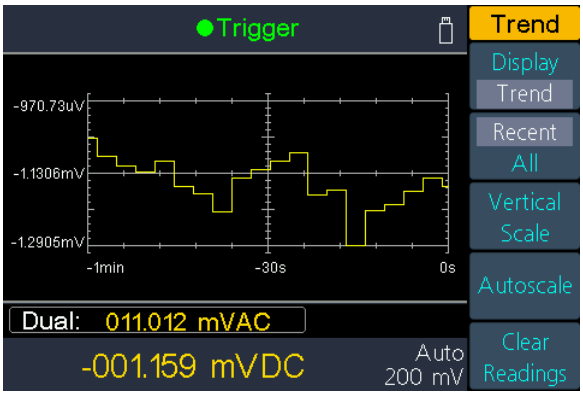

- Press the Recent/All softkey to select Recent or All. In the trend chart, **Recent** shows just the most recent data, **All** shows all of the data.

  All: The trend chart displays all readings being taken and builds from left to right. After the display is filled, the data becomes compressed on the left side of the display as new data is added on the right side of the display.

  Recent: The trend chart displays data taken during the last minute.

- Press the Vertical Scale softkey to specifies how the current vertical scale is determined.

  Default: Set the scale to equal the measurement range. For example, for the DCV measurement function, the vertical scale will be set as -200 mV to 200 mV when the present range is 200 mV.

  Manual: Allow you to configure the scale either as **High** and **Low** values or as a **Span** around a **Center** value. For example, a scale that goes from a Low of -50

mV to a High of 100 mV could also be specified as a Center of 25 mV with a Span of 150 mV.

Auto: Automatically adjusts the scale to appropriately fit the line currently shown on the screen.

- Press the Autoscale softkey to automatically set the vertical scale once.
- Press the Clear Readings softkey to clear reading memory and redraw.

Histogram

Press the front panel Graph key to access the menu, press the Display softkey to select Histogram. In the histogram display, data is grouped in bins represented by vertical bars. The histogram shows the distribution of measurement data.

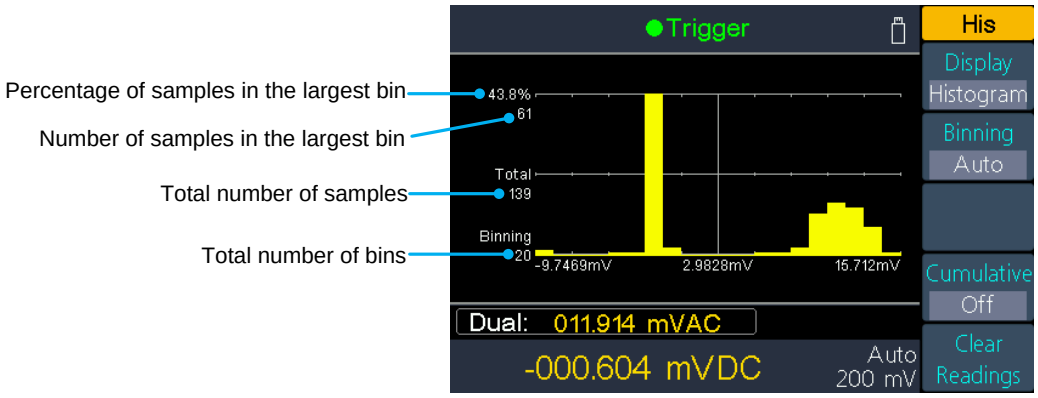

Press the Binning softkey to select **Auto binning** or **Manual binning**.

Press the Cumulative softkey to hide or show a line representing the cumulative distribution of the histogram data.

Press the Clear Readings softkey to clear reading memory and redraw.

Auto binning

The algorithm starts by continuously readjusting the histogram span based on the readings coming in, completely re-binning the data whenever a new value comes in outside of the current span. The number of bins shown is a function of the number of readings received:

Number of readings	＜100	100 - 500	500 - 1000	1000 - 5000	＞5000
Number of bins	10	20	40	100	300

Manual binning

Press the Bin Settings softkey to access the bin settings menu.

- Press the Num.Bins softkey to set number of bins to 10, 20, 40, 100, or 300.
- You can specify the bin range as either Low and High values, or as a Span around a Center value. For example, the bin range with a Low of -5 V and a High of 10 V could be specified as a Center of 2.5 V and a Span of 15 V.
- Press the Outer Bins softkey to display or hide the outer bins. The outer bins are two additional bins, for readings above and below the bin range.

Data Record Function

Data record function includes manual record and auto record. You can use any or both functions to record the data.

Manual record: Press the front panel Save key to save current reading to internal memory. The maximum number of readings is 1000. Once you have finished collecting data, you can view it in table, and export it to external memory.

Auto record: After setting memory, number of readings, sample interval, press the Start softkey to start recording. You can view the data in internal memory in table or graph.

Manual Record

1. **Collect data**: The instrument saves current reading in internal memory each time the front panel Save key is pressed. The instrument beeps, and the icon will show up on the top of the display.

   Note: The measurement function can be switched during manual record. When the dual display is enabled, both readings can be recorded.

2. **View the manual record**: Press the front panel Record key, press the Manual record softkey to display the data table. Press keys to turn the page. (When the data table is shown, you can still save current reading by pressing the Save key.)

   Note:

   - When the recording data exceeds the current range, the data will be marked as "overload".
   - "rel" in the table indicates the relative operation is turned on.

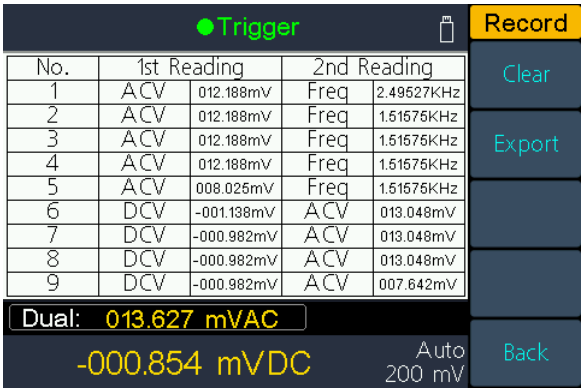

3. **Export to USB memory**: Connect a USB memory to the front panel USB connector. Press the Export softkey to export the manual record in internal memory to USB memory as a CSV file. The file will be saved in **\Record\Manual** folder in USB memory. The file name is **Data_YYYYMMDD_HHMMSS**, YYYYMMDD is the data recording start date, HHMMSS is the start time, e.g. Data_20160804_095622.csv.

4. **Clear the manual record**: Press the Clear softkey to clear current manual record.

Auto Record

1. **Configure the parameters**: Press the front panel Record key, press the Auto record softkey.

   Press the Memory softkey to select internal or external memory

   Press the Points softkey to specify the total number of readings to record. The range is 1 to 1 M for internal memory, 1 to 100 M for external memory.

   Press the Interval softkey to specify the time interval between readings. The range is 5 ms to 1000 s.

2. **Record data**: Press the Start softkey to start auto record. The icon will show up on the top of the display. Press the Stop softkey to stop recording, the data will be saved in the specified memory as a CSV file. If the external memory is selected, the file will be saved in **\Record\Auto** folder in USB memory. The file name is **Data_YYYYMMDD_HHMMSS**, YYYYMMDD is the data recording start date, HHMMSS is the start time, e.g. Data_20160804_095622.csv.

   Note:

   - When the auto recording mode is running, press another measurement function key, the instrument will display a message "Press the key again to switch function and stop recording.".
     If you want to continue auto recording, just wait until the message disappears.
     If you want to stop auto recording and switch to the function, press the function key again when the message is still displayed. The recording data before switching the function will be saved.

   - In auto range, the relay switch may cause jitter, the data at this time is invalid. It will last about a few hundred milliseconds, and the data acquired in this period will be marked as "invalid".

- When the dual display is enabled, only the reading of main display function can be saved.

3. **Read and view the auto recording file**: Press the front panel Record key, press the View record softkey.

Memory can only be internal memory.

Press the Display softkey to select **Table** or **Graph** to display the readings.

Press the Read softkey to read and view the auto record file in the internal memory. (If the data is viewed in table, press keys to turn the page.)

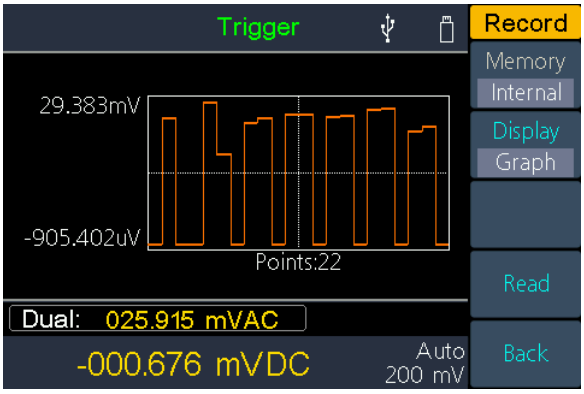

Auto recording data displayed in graph

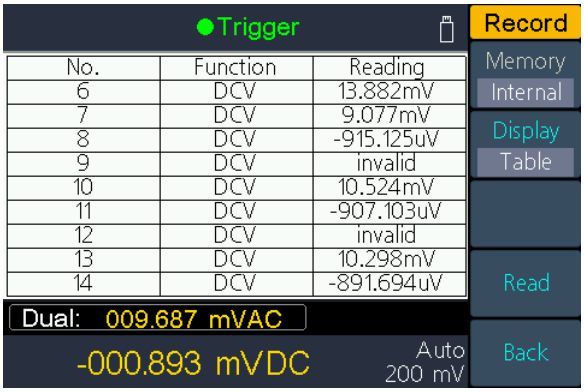

No.	Function	Reading
6	DCV	13.882mV
7	DCV	9.077mV
8	DCV	-915.125uV
9	DCV	invalid
10	DCV	10.524mV
11	DCV	-907.103uV
12	DCV	invalid
13	DCV	10.298mV
14	DCV	-891.694uV

Auto recording data displayed in table

Port Configuration

You can configure the port parameters in port configuration.

Serial

Press the front panel Port key, press the Serial softkey to access the serial port setting menu.

Press the Baud softkey to select the desired baud rate from 1200, 2400, 4800, 9600, 19200, 38400, 57600 or 115200. The default is 9600. Make sure that the baud rate matches that of the computer.

Press the Data bits softkey, select the data bits from 5, 6, 7, 8.

Press the Odd-Even softkey, select the parity from None, Odd or Even. The default is None.

Press the Stop bit softkey, select the stop bit from 1, 2.

Trigger

See page 37, *Triggering*.

Output

Press the front panel Port key, press the Output softkey to access the output setting menu.

Press the Output softkey to configure the output of the [**AUX Output**] connector at the rear panel.

● VMComp

Defaults to Voltmeter Measurement Complete Output, outputs a pulse whenever the multimeter finishes taking a measurement to allow you to signal other devices.

Press the VMC Out softkey to set the edge slope of the voltmeter complete output.

● P/F

The [**AUX Output**] connector can be configured to output a pulse when the limits are exceeded in Math limits function.

Net Type

Press the front panel Port key, press the NET Type softkey to select Off, LAN etc.

LAN

Press the LAN Setting softkey, set the IP address, subnet mask, gateway, port.

Press ◄ ► to move the cursor, press ▲▼ to increase or decrease the value. Restart the instrument for the parameter changes to take effect.

Contact your LAN administrator for the LAN setting details.

Utility Menu

You can set the parameters of the system-related functions. in utility menu.

Language

Press the front panel Utility key, press the Language softkey to switch display languages.

Backlight

Press the front panel Utility key, press the BLight softkey to adjust the brightness.

Clock

Press the front panel Utility key, press the Clock softkey. The clock menu displays the date and time. The time always uses a 24-hour format (00:00:00 to 23:59:59).

Press the Setup softkey to edit the date and time, press ◄ ► to move the cursor, press ▲▼ to increase or decrease the value. Press the Done softkey to finish the clock setting.

SCPI

Press the front panel Utility key, press the SCPI softkey to select the desired setting.

Default

Press Utility → Next → Default to restore the multimeter to factory defaults. The measurement function will be automatically set to DCV.

Factory default settings

Parameter			Factory Setting
Measurement	DCV	Range	Auto
		Speed	Low
		Filter	Off
		Input Z	10M
		Rel	Off
	ACV	Range	Auto
		Speed	Low
		Rel	Off
	DCI	Range	Auto
		Speed	Low
		Filter	Off
		Rel	Off
	ACI	Range	Auto
		Speed	Low
		Rel	Off
	Ω2W/Ω4W	Range	Auto
		Speed	Low
		Ω 2W/Ω 4W	Ω 2W
		Rel	Off
	Cont	Beeper	On
		Threshold	50Ω
	Diode	Beeper	On
	CAP	Range	Auto

Parameter			Factory Setting
		Rel	Off
	Freq	Range	Auto
		Freq/Period	Freq
		Rel	Off
	Temp	Load	KITS90
		Display	All
		Units	K
		Rel	Off
Math	Statistics	Show/Hide	Hide
	Limits	Limits	Off
		High	2V/2A/2KΩ/2uF/2Hz/2s/2k℃
		Low	0V/0A/0KΩ/0uF/0Hz/0s/0k℃
		Center	1V/1A/1KΩ/1uF/1Hz/1s/1k℃
		Span	2V/2A/2KΩ/2uF/2Hz/2s/2k℃
		Pass/Fail	Pass
	dB/dBm	On/Off	Off
		Function	dBm
		Ref R	50Ω
		dB Ref Value	0 dBm
	Rel		0 V
	Beeper		On

Parameter			Factory Setting
Utility	BLight		50%
	SCPI		8845
Port	Serial	Baud	115200
		Data bits	8
		Odd-Even	None
		Stop bit	1
	Trigger	Source	Auto
		Delay	Auto
		Delay time	0 s
		Samples trigger	1
	Output	Output	VM Comp
		VMC Out	Positive
	NET Type	IP	192.168.001.099
		Subnet Mask	255.255.255.000
		Gateway	192.168.001.001
		Physical address	000fea36ea46
		Port	3000
		Net	Off
Graph	Display		Number
	Bar Meter	Scale	Default
	Trend	Recent/All	Recent
	Histogram	Binning	Auto

Parameter			Factory Setting
		Cumulative	Off
Record	Auto record	Memory	Internal
		Points	1000
		Interval	1 s
		Start/Stop	Stop
	View record	Display	Graph

System Info

Press Utility → Next → System Info to view the model, firmware version, serial number.

Update firmware

Use the front-panel USB port to update your instrument firmware using a USB memory device.

USB memory device requirements: This instrument supports a USB memory device with a FAT32 or FAT16 file system. If the USB memory device doesn't work properly, format it into the FAT32 or FAT16 format and try again; or try another USB memory device.

⚠ **Caution:** Updating your instrument firmware is a sensitive operation, to prevent damage to the instrument, do not power off the instrument or remove the USB memory device during the update process.

To update your instrument firmware, do the following:

1. Press Utility → Next → System Info to view the model and firmware version.
2. From a PC, visit www.PeakTech.de and check if the website offers a newer firmware version. Download the firmware file. The file name must be DMMFW.upp. Copy the firmware file onto the root directory of your USB memory device.

3. Insert the USB memory device into the front-panel USB port on your instrument. If the icon appears on the top right of the screen, the USB memory device is installed successfully.
4. Press Utility → Next → System Info, press the Update firmware softkey.
5. The instrument displays a message telling you not to remove the USB device or power off the instrument until the update process is complete. The progress bar of the screen indicates the update process is in progress.

   Note: A firmware update usually takes approximately a minute. Do not remove the USB memory device during the update process. If you accidentally removed the USB memory device during the update process, do not power off the instrument. Repeat the installation process from step 3.
6. Wait until the instrument displays "Firmware upgrade success.", and then it will reboot automatically.

   Note: If the operation complete message is not displayed, do not power off the instrument. Repeat the installation process from step 2 using a different type of USB memory device.
7. Remove the USB memory device from the front-panel USB connector.
8. Press Utility → Next → System Info, view the firmware version. Confirm that the firmware has been updated.

LCD Test

The instrument provides the screen self testing, which can test the LCD screen.

Press Utility → Next → LCD Test to access the screen test interface. Press the Change softkey to switch the color between red, green, and blue. Observe if the screen has severe color shift, spot, scuffing, or other defect. Press the last softkey to exit the test.

Key Test

The instrument provides the key self testing, which can test the keys on the front panel.

Press Utility → Next → Key Test to access the key test interface. Each shape on the test interface represents a front panel key. Press any front panel key, the corresponding shape on the test interface will turn green. Press the Return softkey to exit the test.

4. Measurement Tutorial

Loading Errors (DC Voltage)

Measurement loading errors occur when the resistance of the DUT(Device-Under-Test) is an appreciable percentage of the multimeter's input resistance, as shown below.

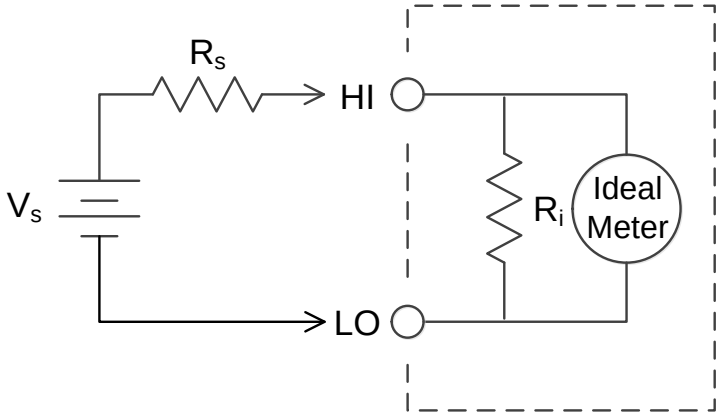

V_s = ideal DUT voltage

R_s = DUT source resistance

R_i = multimeter input resistance (10 MΩ or >10 GΩ)

$$\text{Error} \quad (\%) = \frac{100 \times R_s}{R_s + R_i}$$

To reduce the effects of loading errors and to minimize noise interference, set the multimeter's input resistance to 10 GΩ for the 200 mVDC and 2 VDC ranges. The input resistance is maintained at 10 MΩ for the 20 VDC, 200 VDC, and 1000 VDC ranges.

True RMS AC Measurements

The AC measurement of the multimeter has true RMS response. Power dissipated in a resistor is proportional to the square of an applied voltage, independent of the wave shape of the signal. This multimeter accurately measures true rms voltage or current, as long as the wave shape contains negligible energy above the meter's effective bandwidth.

The effective AC voltage bandwidth of the multimeter is 100 kHz, while the effective AC current bandwidth is 10 kHz.

Waveform Shape	Crest Factor (C.F.)	AC RMS	AC+DC RMS
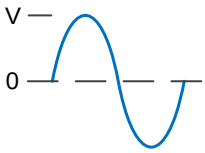	$\sqrt{2}$	$\frac{V}{\sqrt{2}}$	$\frac{V}{\sqrt{2}}$
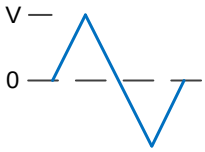	$\sqrt{3}$	$\frac{V}{\sqrt{3}}$	$\frac{V}{\sqrt{3}}$
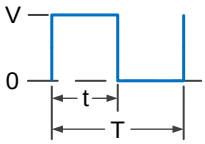 (50% duty cycle)	1	$\frac{V}{C.F.}$	$\frac{V}{C.F.}$

The multimeter's AC voltage and AC current functions measure the AC-coupled true rms value, the RMS value of only the AC components of the input waveform are measured (DC is rejected). As seen in the figure above; for sine waves, triangle waves, and square waves, the AC–coupled and AC+DC values are equal, because these waveforms do not contain a DC offset. However, for non–symmetrical waveforms (such as pulse trains) there is a DC voltage content, which is rejected by the multimeter's AC–coupled true rms measurements.

The AC coupled true RMS measurement is especially useful for measuring small AC signals in the presence of large DC offsets. For example, this situation is common when measuring AC ripple present on DC power supplies. However, there are situations where you might want to know the AC+DC true RMS value. You can determine this value by combining results from DC and AC measurements, as shown below:

$$ac + dc = \sqrt{ac^2 + dc^2}$$

For the best AC noise rejection, you should select "Low" measurement speed to get 5½ digits reading resolution when performing the DC measurement.

Loading Errors (AC Voltage)

In the AC voltage function, the input impedance of the multimeter appears as a 1 MΩ resistance in parallel with 100 pF of capacitance. The cabling that you use to connect signals to the multimeter also adds capacitance and loading. The table below shows the multimeter's approximate input resistance at various frequencies.

Input Frequency	Input Resistance
100 Hz	1 MΩ
1 kHz	850 kΩ
10 kHz	160 kΩ
100 kHz	16 kΩ

For low frequencies, the loading error is:

$$\text{Error } (\%) = \frac{-100 \times R_s}{R_s + 1\,\text{M}\Omega}$$

At high frequencies, the additional loading error is:

$$\text{Error } (\%) = 100 \times \left[\frac{1}{\sqrt{1 + \left(2\pi \times F \times R_S \times C_{in}\right)^2}} - 1 \right]$$

R_s = source resistance

F = input frequency

C_{in} = input capacitance (100 pF) plus cable capacitance

5. Troubleshooting

1. The instrument is powered on but no Display.

1) Check if the power is connected properly.
2) Check if the AC Mains Line Voltage Selector is in the proper voltage scale.
3) Check if the line fuse which is below the AC Mains Input is used appropriately and in good condition (see page 68, *Appendix C: Line Fuse Replacement*).
4) Restart the instrument after the steps above.
5) If the problem still exists, please contact PEAKTECH for our service.

2. The reading does not change when a current signal is input.

1) Check whether the test lead is correctly inserted into the current input terminals (I terminal and LO Input terminal).
2) Check whether the current terminal fuse at the front panel is burned out. Please refer to "7 Current Terminal Fuse" in "Front panel overview" on page 9.
3) Check whether the DCI or ACI measurement function is enabled.
4) Check whether the DCI measurement function is used to measure AC current.

If you encounter other problems, try to reset the settings or restart the instrument. If it still can not work properly, please contact PEAKTECH for our service, and provide your device information. (Utility → Next → System Info)

6. Technical Specifications

P4096 Specifications

Accuracy: ± (% of reading + % of range) [1]

Function	Range[2]	Frequency Range or Test Current	Accuracy: 1 year 23℃±5℃	Temperature Coefficient 0℃ - 18℃ 28℃ - 50℃
DC Voltage	200 mV	/	0.015±0.004	0.0015 + 0.0005
	2 V			0.0010 + 0.0005
	20 V			0.0020 + 0.0005
	200 V			0.0015 + 0.0005
	1000 V [3]			0.0015 + 0.0005
True RMS AC Voltage[4]	200mV, 2V, 20V, 200V, 750V	20 Hz – 45 Hz	1.5 + 0.10	0.01 + 0.005
		45 Hz – 20 kHz	0.2 + 0.05	0.01 + 0.005
		20 kHz – 50 kHz	1.0 + 0.05	0.01 + 0.005
		50 kHz – 100 kHz	3.0 + 0.05	0.05 + 0.010
DC Current	200.000 µA	/	0.055 + 0.005	0.003 + 0.001
	2.00000 mA		0.055 + 0.005	0.002 + 0.001
	20.0000 mA		0.095 + 0.020	0.008 + 0.001
	200.000 mA		0.070 + 0.008	0.005 + 0.001
	2.00000 A		0.170 + 0.020	0.013 + 0.001
	10.0000 A [5]		0.250 + 0.010	0.008 + 0.001
True RMS AC Current[6]	20.0000 mA, 200.000 mA, 2.00000 A, 10.0000 A [5]	20 Hz – 45 Hz	1.5 + 0.10	0.015 + 0.005
		45 Hz – 2 kHz	0.50 + 0.10	0.015 + 0.005
		2 kHz – 10 kHz	2.50 + 0.20	0.015 + 0.005
Resistance[7]	200.000 Ω	1 mA	0.030 + 0.005	0.0030 + 0.0006
	2.00000 kΩ	1 mA	0.020 + 0.003	0.0030 + 0.0005
	20.0000 kΩ	100 µA	0.020 + 0.003	0.0030 + 0.0005
	200.000 kΩ	10 µA	0.020 + 0.003	0.0030 + 0.0005
	2.00000 MΩ	1 µA	0.040 + 0.004	0.0040 + 0.0005
	10.0000 MΩ	200 nA	0.250 + 0.003	0.0100 + 0.0005
	100.000 MΩ	200 nA || 10 MΩ	1.75 + 0.004	0.2000 + 0.0005
Diode Test	2.0000 V [8]	1 mA	0.05 + 0.01	0.0050 + 0.0005
Continuity	2000 Ω	1 mA	0.05 + 0.01	0.0050 + 0.0005
Frequency	200 mV to 750 V [9]	20 Hz – 2 kHz	0.01 + 0.003	0.002 + 0.001

/Period		2 kHz – 20 kHz	0.01 + 0.003	0.002 + 0.001
		20 kHz – 200 kHz	0.01 + 0.003	0.002 + 0.001
		200 kHz – 1 MHz	0.01 + 0.006	0.002 + 0.002
	20 mA to 10 A	20 Hz – 2 kHz	0.01 + 0.003	0.002 + 0.001
		2 kHz – 10 kHz	0.01 + 0.003	0.002 + 0.001
Capacitance[10]	2.000 nF	200 nA	3 + 1.0	0.08 + 0.002
	20.00 nF	200 nA	1 + 0.5	0.02 + 0.001
	200.0 nF	2 μA	1 + 0.5	0.02 + 0.001
	2.000 μF	10 μA	1 + 0.5	0.02 + 0.001
	200 μF	100 μA	1 + 0.5	0.02 + 0.001
	10000 μF	1 mA	2 + 0.5	0.02 + 0.001
Temperature	Temperature sensors under 2 categories supported - thermocouple (ITS-90 conversion between B / E / J / K / N / R / S / T type), and thermal resistance (RTD sensor conversion between PT100 and PT385 type)			

[1] Specifications are for 30-minute warm-up, "Low" measurement rate and calibration temperature 18℃ - 28℃.

[2] 20% over range on all ranges, except 1,000 V DCV, 750 ACV, 10 A DCI, 10 A ACI, 100 MΩ resistance, and 10000 μF capacitance.

[3] For each additional volt over ± 500 VDC add 0.02 mV of error.

[4] Specifications are for amplitude of sine wave input > 0.5% of range. For inputs from 1% to 5% of range and <50 kHz, add 0.1% of range extra error. For 50 kHz to 100 kHz, add 0.13% of range extra error.

[5] 30 seconds OFF after 30 seconds ON is recommend for the continuous current that higher than DC 7 A or AC RMS 7 A.

[6] Specifications are for amplitude of sine wave input > 0.5% of range. 0.1% errors will be added when the range of input sine wave is 1% to 5%.

[7] Specifications are for 4–wire ohms function or 2–wire ohms using the relative operation of math. Without relative operation, add ±0.20 Ω additional error in 2-wire ohms function.

[8] Specifications are for the voltage measured at the input terminals. The 1 mA test current is typical. Variation in the current source will create some variation in the voltage drop across a diode junction.

[9] Except for special marks, the AC input voltage is 15% to 120% of range when ≤100 kHz and 30% to 120% of range when >100 kHz. 750 V range is limited to 750 Vrms.

[10]Specifications are for using the relative operation of math. Using of non-film capacitor may generate additional errors. Specifications are for from 1% to 120% on 2 nF range and ranges from 10% to 120% on other ranges.

P4095 Specifications

Accuracy: ± (% of reading + % of range) [1]

Function	Range[2]	Frequency Range or Test Current	Accuracy: 1 year 23℃±5℃
DC Voltage	600 mV	/	0.02±0.01
	6 V		
	60 V		
	600 V		
	1000 V [3]		
True RMS AC Voltage[4]	600mV, 6V, 60V, 600V, 750V	20 Hz – 45 Hz	2 + 0.10
		45 Hz – 20 kHz	0.2 + 0.06
		20 kHz – 50 kHz	1.0 + 0.06
		50 kHz – 100 kHz	3.0 + 0.08
DC Current	600.00 μA	/	0.06 + 0.02
	6.0000 mA		0.06 + 0.02
	60.000 mA		0.1 + 0.05
	600.00 mA		0.2 + 0.02
	6.0000 A		0.2 + 0.05
	10.000 A [5]		0.250 + 0.05
True RMS AC Current[6]	60.000 mA, 600.00 mA, 6.0000 A, 10.000 A [5]	20 Hz – 45 Hz	2 + 0.10
		45 Hz – 2 kHz	0.50 + 0.10
		2 kHz – 10 kHz	2.50 + 0.20
Resistance[7]	600.00 Ω	1 mA	0.040 + 0.01
	6.0000 kΩ	1 mA	0.030 + 0.01
	60.000 kΩ	100 μA	0.030 + 0.01
	600.00 kΩ	10 μA	0.040 + 0.01
	6.0000 MΩ	1 μA	0.120 + 0.03
	60.000 MΩ	200 nA || 10 MΩ	0.90 + 0.03
	100.00 MΩ	200 nA || 10 MΩ	1.75 + 0.03
Diode Test	3.0000 V [8]	1 mA	0.05 + 0.01
Continuity	1000 Ω	1 mA	0.05 + 0.01
Frequency /Period	600 mV to 750 V [9]	20 Hz – 2 kHz	0.01 + 0.003
		2 kHz – 20 kHz	0.01 + 0.003
		20 kHz – 200 kHz	0.01 + 0.003

		200 kHz – 1 MHz	0.01 + 0.006
	60 mA to 10 A	20 Hz – 2 kHz	0.01 + 0.003
		2 kHz – 10 kHz	0.01 + 0.003
Capacitance[10]	2.000 nF	200 nA	3 + 1.0
	20.00 nF	200 nA	1 + 0.5
	200.0 nF	2 μA	1 + 0.5
	2.000 μF	10 μA	1 + 0.5
	200 μF	100 μA	1 + 0.5
	10000 μF	1 mA	2 + 0.5
Temperature	Temperature sensors under 2 categories supported - thermocouple (ITS-90 conversion between B / E / J / K / N / R / S / T type), and thermal resistance (RTD sensor conversion between PT100 and PT385 type)		

[1] Specifications are for 30-minute warm-up, "Low" measurement rate and calibration temperature 18℃ - 28℃.

[2] 10% over range on all ranges, except 1,000 V DCV, 750 ACV, 10 A DCI, 10 A ACI, 100 MΩ resistance, and 10000 μF capacitance.

[3] For each additional volt over ± 500 VDC add 0.02 mV of error.

[4] Specifications are for amplitude of sine wave input > 0.5% of range. For inputs from 1% to 5% of range and <50 kHz, add 0.1% of range extra error. For 50 kHz to 100 kHz, add 0.13% of range extra error.

[5] 30 seconds OFF after 30 seconds ON is recommend for the continuous current that higher than DC 7 A or AC RMS 7 A.

[6] Specifications are for amplitude of sine wave input > 0.5% of range. 0.1% errors will be added when the range of input sine wave is 1% to 5%.

[7] Specifications are for 4–wire ohms function or 2–wire ohms using the relative operation of math. Without relative operation, add ±0.20 Ω additional error in 2-wire ohms function.

[8] Specifications are for the voltage measured at the input terminals. The 1 mA test current is typical. Variation in the current source will create some variation in the voltage drop across a diode junction.

[9] Except for special marks, the AC input voltage is 15% to 110% of range when ≤100 kHz, and 30% to 110% of range when >100 kHz. 750 V range is limited to 750 Vrms. When the measurement range of AC voltage is in 600 mV range, multiply % of reading error x10.

[10]Specifications are for using the relative operation of math. Using of non-film capacitor may generate additional errors. Specifications are for from 1% to 110% on 2 nF range and ranges from 10% to 110% on other ranges.

Temperature Characteristic

Accuracy: ± (% of reading + % of range) [1]

Function	Probe Type	Probe Model	Working Temperature Range	Accuracy: 1 year 23℃±5℃	Temperature Coefficient 0℃- 18℃ 28℃- 50℃
Temperature	RTD[2]	α=0.00385	-200℃ to 660℃	0.16℃	0.08+0.002
	TC[3]	B	0℃ to 1820℃	0.76℃	0.14℃
		E	-270℃ to 1000℃	0.5℃	0.02℃
		J	-210℃ to 1200℃	0.5℃	0.02℃
		K	-270℃ to 1372℃	0.5℃	0.03℃
		N	-270℃ to 1300℃	0.5℃	0.04℃
		R	-270℃ to 1768℃	0.5℃	0.09℃
		S	-270℃ to 1768℃	0.6℃	0.11℃
		T	-270℃ to 400℃	0.5℃	0.03℃

[1] Specification are for 0.5 hour warm-up, not include probe error.

[2] Specification are for 2-wire measure under "REF" operation.

[3] Built-in cold terminal compensation for thermocouple, accuracy is ±2℃.

Data Record Function

Manual Record Function	
Press the front panel **Save** key to save current reading. The maximum number of readings is 1000.	
Auto Record Function	
Max number of readings	1 M for internal memory; 100 M for external memory
Max storage capacity	8 MB for internal memory; 800 MB for external memory
Sample interval	5 ms to 1000 s

Trigger

External Trigger Input	Input level	TTL compatible (High level when left input terminal is hanging in the air)
	Trigger condition	Selectable rising edge or falling edge
	Input impedance	≥20 kΩ in parallel with 400 pF, DC-coupled
	Minimum pulse width	500 μs
VMC Output	Level	TTL compatible
	Output polarity	Selectable positive or negative
	Output impedance	200 Ω, typical

General Specifications

Dimension	(W x H x D): 235 mm × 110 mm × 295 mm
Weight	3.06 kg

7. Appendix

Appendix A: Enclosure

Standard Accessories (subject to final delivery)**:**

Power Cord

Test lead

Alligator clip

USB Cable

Spare Fuses

10A, 250 VAC

Software / Driver / Manual

Appendix B: General Care and Cleaning

General Care

Do not store or leave the instrument where the liquid crystal display will be exposed to direct sunlight for long periods of time.

Cleaning

To clean the instrument exterior, perform the following steps:

1. To prevent electrical shock, disconnect the instrument from AC mains power and disconnect all test leads before cleaning.
2. Clean the outside of the instrument using a wet soft cloth not dripping water. Do not make any scuffing when cleaning the LCD screen. To avoid damage to the instrument, do not use any corrosive chemical cleaning agent.

Caution: To avoid any damage to the instrument, do not exposed it to any sprays, liquids, or solvents.

Warning: Before power on again for operation, it is required to confirm that the instrument has already been dried completely, avoiding any electrical short circuit or bodily injury resulting form the moisture.

Appendix C: Line Fuse Replacement

The line fuse is in the plastic fuse box below the power line input on the rear panel.

Warning: Disconnect the line cord at the rear panel and remove all test leads connected to the instrument before replacing the line fuse. Failure to do so could expose the operator to hazardous voltages that could result in personal injury or death.

Use only the correct fuse type. Failure to do so could result in personal injury or instrument damage.

Voltage	Fuse
100 - 120 V AC	250 V, F1AL
220 - 240 V AC	250 V, F0.5AL

To perform the line fuse replacement, follow these steps:

1. Turn off the multimeter, remove all measurement leads and other cables from the instrument, including the power cord.

2. Use a flat-blade screwdriver to remove the fuse box.

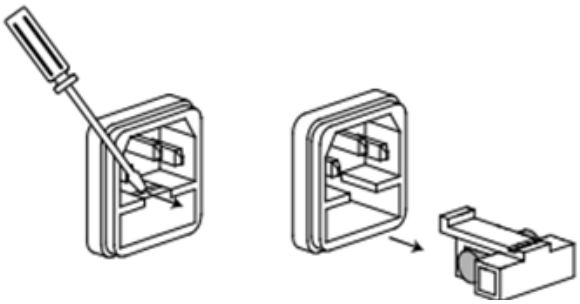

3. Replace the fuse with a new one, which should match with the voltage; install it into the fuse box, and push the fuse box back on to the rear panel.

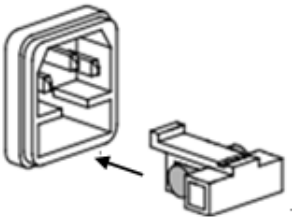

All rights, also for translation, reprinting and copy of this manual or parts are reserved.
Reproduction of all kinds (photocopy, microfilm or other) only by written permission of the publisher.
This manual considers the latest technical knowing. Technical changings which are in the interest of progress reserved.
We herewith confirm, that the units are calibrated by the factory according to the specifications as per the technical specifications.
We recommend to calibrate the unit again, after 1 year.

©***PeakTech***® 05/2017/EHR

PeakTech Prüf- und Messtechnik GmbH – Gerstenstieg 4 –
DE-22926 Ahrensburg / Germany
☎+49-(0) 4102-42343/44 +49-(0) 4102-434 16
info@peaktech.de www.peaktech.de